# CCD-TRV107/TRV108/TRV308/ TRV408/TRV608

## RMT-708

# SERVICE MANUAL

Self Diagnosis Supported model

**Ver 1.3 2003. 05**

Handycam Vision™

video Hi8

InfoLITHIUM™ M SERIES

Photo : CCD-TRV108

*US Model*
*Canadian Model*
*CCD-TRV108/TRV308/TRV608*
*E Model*
*CCD-TRV107/TRV108/TRV308/ TRV408/TRV608*
*Korea Model*
*CCD-TRV408*
*Hong Kong Model*
*Tourist Model*
*CCD-TRV107/TRV408*
*Argentina Model*
*CCD-TRV108/TRV608*
*Brazilian Model*
*CCD-TRV108*

M2100 MECHANISM

**For MECHANISM ADJUSTMENT, refer to the "8mm Video MECHANICAL ADJUSTMENT MANUAL IX M2000 MECHANISM " (9-929-861-11).**

## SPECIFICATIONS

### Video camera recorder

#### System

**Video recording system**
2 rotary heads
Helical scanning
FM system
**Audio recording system**
Rotary heads, FM system
**Video signal**
NTSC color, EIA standards
**Usable cassette**
8mm video format cassette
Hi8 or standard 8
**Recording/playback time (using 120 min. Standard 8/Hi8 video cassette)**
SP mode: 2 hours
LP mode: 4 hours
**Fastforward/rewind time (using 120 min. Standard 8/Hi8 video cassette)**
Approx. 5 min.
**Viewfinder**
Electric Viewfinder (monochrome)
**Image device**
CCD-TRV107/TRV108:
3.0 mm (1 / 6 type) CCD
(Charge Coupled Device)
Approx. 270 000 pixels
(Effective: Approx. 250 000 pixels)
CCD-TRV308/TRV408/TRV608:
4.5mm (1/4 type) CCD
(Charge Coupled Device)
Approx. 320 000 pixels
(Effective: Approx. 200 000 pixels)

**Lens**
Combined power zoom lens
Filter diameter 37 mm (1 7/16 in.)
CCD-TRV107:
20× (Optical), 450× (Digital)
CCD-TRV108/TRV308:
20× (Optical), 460× (Digital)
CCD-TRV408/TRV608:
20× (Optical), 560× (Digital)
**Focal length**
3.6 - 72 mm (5/32 - 2 7/8 in.)
When converted to a 35 mm still camera
CCD-TRV107/TRV108:
51.8 - 1 036 mm (2 - 40 6 / 8 in.)
CCD- TRV308/TRV408/TRV608:
41 - 820 mm (1 5 / 8 - 32 3 / 8 in.)
**Color temperature**
Auto
**Minimum illumination**
CCD-TRV107/TRV108:
1 lx (lux) (F 1.4)
CCD-TRV308/TRV408/TRV608:
0.4 lx (lux) (F 1.4)
0 lx (lux) (in the NightShot mode)*
* Objects unable to be seen due to the dark can be shot with infrared lighting.

#### Input/output connectors

**S video output**
4-pin mini DIN
Luminance signal: 1 Vp-p, 75 Ω (ohms), unbalanced
Chrominance signal: 0.286 Vp-p, 75 Ω (ohms), unbalanced

**Audio/Video output**
AV MINIJACK, 1 Vp-p, 75 Ω (ohms), unbalanced, sync negative 327 mV, (at output impedance more than 47 kΩ (kilohms))
Output impedance with less than 2.2 kΩ (kilohms)/Monaural minijack
(ø 3.5 mm)
**RFU DC OUT**
Mini-mini jack (ø 2.5 mm)
DC 5V
**USB jack (CCD-TRV608 only)**
mini-B

#### LCD screen

**Picture**
CCD-TRV107/TRV108/TRV308/ TRV408:
6.2 cm (2.5 type)
50.3×37.4 mm (2×1 1/2 in.)
CCD-TRV608:
7.5 cm (3 type)
61.0×43.8 mm (2 1/2×1 3/4 in.)
**Total dot number**
CCD-TRV107/TRV108/TRV308/ TRV408:
61 600 (280×220)
CCD-TRV608:
123 200 (560×220)

#### General

**Power requirements**
7.2 V (battery pack)
8.4 V (AC power adaptor)
**Average power consumption (when using the battery pack)**
During camera recording using LCD
CCD-TRV107/TRV108/TRV308/ TRV408: 2.6 W
CCD-TRV608: 3.1 W
Viewfinder
1.9 W
**Operating temperature**
0 °C to 40 °C (32 °F to 104 °F)
**Recommended charging temperature**
10 °C to 30 °C (50 °F to 86 °F)
**Storage temperature**
–20 °C to +60 °C (–4 °F to +140 °F)
**Dimensions (Approx.)**
90×102×197 mm
(3 5/8×4 1/8×7 7/8 in.)
(w/h/d)

— Continued on next page —

# Hi8 VIDEO CAMERA RECORDER

SONY®

**Mass (approx.)**
CCD-TRV107 / TRV108 / TRV308 / TRV408:
850 g (1 lb 14 oz)
CCD-TRV608:
870 g (1 lb 14 oz)
main unit only
CCD-TRV107 / TRV108 / TRV308:
990 g (2 lb 3 oz)
CCD-TRV408 / TRV608:
1.0 kg (2 lb 3 oz)
including the battery pack NP-FM30, 120 min. Hi8 cassette, lens cap and shoulder strap
**Supplied accessories**
See page 3.

## AC power adaptor

**Power requirements**
100 - 240 V AC, 50 / 60 Hz
**Power consumption**
23 W
**Output voltage**
DC OUT: 8.4 V, 1.5 A in the operating mode
**Operating temperature**
0 °C to 40 °C (32 °F to 104 °F)
**Storage temperature**
–20 °C to +60 °C (–4 °F to +140 °F)
**Dimensions (approx.)**
125 × 39 × 62 mm
(5 × 1 9 / 16 × 2 1 / 2 in.)
(w / h / d)
excluding projecting parts
**Mass (approx.)**
280 g (9.8 oz)
excluding power cord

## Battery pack

**Maximum output voltage**
DC 8.4 V
**Output voltage**
DC 7.2 V
**Capacity**
5.0 Wh (700 mAh)
**Operating temperature**
0 °C to 40 °C (32 °F to 104 °F)
**Dimensions (approx.)**
38.2 × 20.5 × 55.6 mm
(1 9 / 16 × 13 / 16 × 2 1 / 4 in.)
(w / h / d)
**Mass (approx.)**
65 g (2.3 oz)
**Type**
Lithium ion

Design and specifications are subject to change without notice.

**CAUTION :**
Danger of explosion if battery is incorrectly replaced.
Replace only with the same or equivalent type.

**SAFETY-RELATED COMPONENT WARNING!!**

**COMPONENTS IDENTIFIED BY MARK ⚠ OR DOTTED LINE WITH MARK ⚠ ON THE SCHEMATIC DIAGRAMS AND IN THE PARTS LIST ARE CRITICAL TO SAFE OPERATION. REPLACE THESE COMPONENTS WITH SONY PARTS WHOSE PART NUMBERS APPEAR AS SHOWN IN THIS MANUAL OR IN SUPPLEMENTS PUBLISHED BY SONY.**

**ATTENTION AU COMPOSANT AYANT RAPPORT À LA SÉCURITÉ!**

**LES COMPOSANTS IDENTIFÉS PAR UNE MARQUE ⚠ SUR LES DIAGRAMMES SCHÉMATIQUES ET LA LISTE DES PIÈCES SONT CRITIQUES POUR LA SÉCURITÉ DE FONCTIONNEMENT. NE REMPLACER CES COMPOSANTS QUE PAR DES PIÈSES SONY DONT LES NUMÉROS SONT DONNÉS DANS CE MANUEL OU DANS LES SUPPÉMENTS PUBLIÉS PAR SONY.**

# SAFETY CHECK-OUT

After correcting the original service problem, perform the following safety checks before releasing the set to the customer.

1. Check the area of your repair for unsoldered or poorly-soldered connections. Check the entire board surface for solder splashes and bridges.
2. Check the interboard wiring to ensure that no wires are "pinched" or contact high-wattage resistors.
3. Look for unauthorized replacement parts, particularly transistors, that were installed during a previous repair. Point them out to the customer and recommend their replacement.
4. Look for parts which, through functioning, show obvious signs of deterioration. Point them out to the customer and recommend their replacement.
5. Check the B+ voltage to see it is at the values specified.
6. Flexible Circuit Board Repairing
   - Keep the temperature of the soldering iron around 270˚C during repairing.
   - Do not touch the soldering iron on the same conductor of the circuit board (within 3 times).
   - Be careful not to apply force on the conductor when soldering or unsoldering.

### Unleaded solder

Boards requiring use of unleaded solder are printed with the lead-free mark (LF) indicating the solder contains no lead.
(Caution: Some printed circuit boards may not come printed with the lead free mark due to their particular size.)

### : LEAD FREE MARK

Unleaded solder has the following characteristics.

- Unleaded solder melts at a temperature about 40°C higher than ordinary solder.
  Ordinary soldering irons can be used but the iron tip has to be applied to the solder joint for a slightly longer time.
  Soldering irons using a temperature regulator should be set to about 350°C.
  Caution: The printed pattern (copper foil) may peel away if the heated tip is applied for too long, so be careful!
- Strong viscosity
  Unleaded solder is more viscous (sticky, less prone to flow) than ordinary solder so use caution not to let solder bridges occur such as on IC pins, etc.
- Usable with ordinary solder
  It is best to use only unleaded solder but unleaded solder may also be added to ordinary solder.

## • SUPPLIED ACCESSORIES

Make sure that the following accessories are supplied with your camcorder.

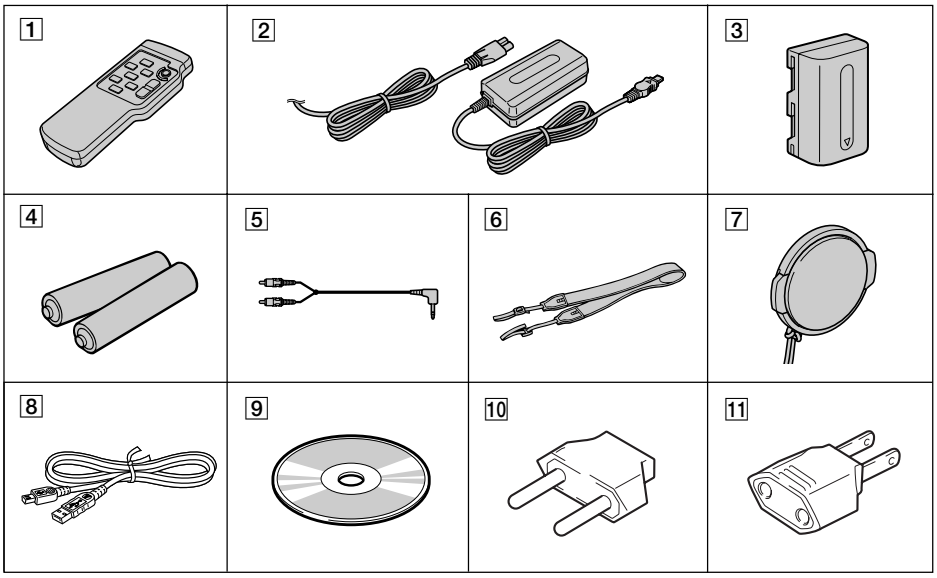


1 **Wireless Remote Commander** (CCD-TRV107 / TRV408 only) (1)

2 **AC-L10A/L10B/L10C AC power adaptor** (1), **Power cord** (1)

3 **NP-FM30 battery pack** (1)

4 **Size AA (R6) battery for Remote Commander** (CCD-TRV107 / TRV408 only) (2)

5 **A/V connecting cable** (1)

6 **Shoulder strap** (1)

7 **Lens cap** (1)

8 **USB Cable** (CCD-TRV608 only) (1)

9 **CD-ROM (SPVD-008 (I) USB Driver)** (CCD-TRV608 only) (1)

10 **2-pin adaptor** (1)
CCD-TRV107: JE / TRV408: JE only

11 **2-pin adaptor** (1)
CCD-TRV107: E, HK /
TRV408: E, HK only

### Table for difference of function

| Model | | CCD-TRV107 | CCD-TRV108 | CCD-TRV308 | CCD-TRV408 | CCD-TRV608 |
|---|---|---|---|---|---|---|
| Destination | | E, HK, JE | US, CND, E, AR, BR | US, CND, E | E, HK, KR, JE | US, CND, E, AR |
| Remote Commander | | RMT-708 | × | | RMT-708 | × |
| Lens | Optical | 20× | | | | |
| | Zoom | 450× | 460× | | 560× | |
| CCD imager size | | 1/6 inch | | 1/4 inch | | |
| Steady shot | | × | | ○ | | |
| View finder type | | Type S | Type M | Type S | | |
| View finder backlight | | ○ | × | ○ | | |
| LCD | Size | 2.5 inch | | | | 3 inch |
| | Pixel | 61K | | | | 123K |
| USB connector | | × | | | | ○ |
| Video light | | ○ | × | ○ | | |

• Abbreviation
CND : Canadian model
HK : Hong Kong model
KR : Korea model
JE : Tourist model
AR : Argentina model
BR : Brazilian model

## TABLE OF CONTENTS


### SERVICE NOTE

1. POWER SUPPLY DURING REPAIRS ..... 7
2. TO TAKE OUT A CASSETTE WHEN NOT EJECT (FORCE EJECT) ..... 7

### SELF-DIAGNOSIS FUNCTION

1. Self-diagnosis Function ..... 8
2. Self-diagnosis Display ..... 8
3. Service Mode Display ..... 8
3-1. Display Method ..... 8
3-2. Switching of Backup No. ..... 8
3-3. End of Display ..... 8
4. Self-diagnosis Code Table ..... 9

### 1. GENERAL

Main Features ..... 1-1
Quick Start Guide ..... 1-1
Getting started
- Using this manual ..... 1-2
- Checking supplied accessories ..... 1-2
- Step 1 Preparing the power supply ..... 1-2
  - Installing the battery pack ..... 1-2
  - Charging the battery pack ..... 1-3
  - Connecting to a wall outlet ..... 1-3
- Step 2 Setting the date and time ..... 1-4
- Step 3 Inserting a cassette ..... 1-4

Recording – Basics
- Recording a picture ..... 1-4
- Shooting backlit subjects – BACK LIGHT ..... 1-6
- Shooting in the dark – NightShot ..... 1-6
- Superimposing the date and time on pictures ..... 1-6
- Checking the recording – END SEARCH ..... 1-7
- Playback – Basics
- Playing back a tape ..... 1-7
- Viewing the recording on TV ..... 1-8

Advanced Recording Operations
- Using the wide mode ..... 1-8
- Using the fader function ..... 1-8
- Using special effects – Picture effect ..... 1-9
- Using the PROGRAM AE function ..... 1-9
- Adjusting the exposure manually ..... 1-10
- Focusing manually ..... 1-10
- Superimposing a title ..... 1-10
- Making your own titles ..... 1-11
- Using the built-in light ..... 1-11

Editing
- Dubbing a tape ..... 1-12
- Dubbing a tape easily – Easy dubbing ..... 1-12

PC Connection (CCD-TRV608 only)
- Viewing images using your computer – USB Streaming (Windows users only) ..... 1-14

Customizing Your Camcorder
- Changing the menu settings ..... 1-16

Troubleshooting
- Types of trouble and their solutions ..... 1-18
- Self-diagnosis display ..... 1-19
- Warning indicators and messages ..... 1-19

Additional Information
- About video cassettes ..... 1-20
- About the “InfoLITHIUM” battery pack ..... 1-20
- Using your camcorder abroad ..... 1-20
- Maintenance information and precautions ..... 1-21

Quick Reference
- Identifying the parts and controls ..... 1-22

### 2. DISASSEMBLY

2-1. VIDEO LIGHT (VIDEO LIGHT MODEL) ..... 2-2
2-2. LCD SECTION (PD-156 BOARD) ..... 2-3
2-3. VF-150, LB-073 BOARDS (TRV107/TRV308/TRV408/TRV608) ..... 2-4
2-4. LIQUID CRYSTAL INDICATOR MODULE (TRV108) ..... 2-5
2-5. FRONT PANEL SECTION (SI-033 BOARD) ..... 2-6
2-6. CABINET (L) SECTION ..... 2-7
2-7. CABINET (R) SECTION ..... 2-8
2-8. EVF SECTION ..... 2-8
2-9. BATTERY PANEL SECTION ..... 2-9
2-10. LENS SECTION ..... 2-9
2-11. VC-272 BOARD ..... 2-10
2-12. CONTROL SWITCH BLOCK (CF-2000) ..... 2-10
2-13. MECHANISM DECK ..... 2-13
2-14. HINGE ASSEMBLY ..... 2-13
2-15. CIRCUIT BOARDS LOCATION ..... 2-14
2-16. FLEXIBLE BOARDS LOCATION ..... 2-15

### 3. BLOCK DIAGRAMS

3-1. OVERALL BLOCK DIAGRAM (1/2) ..... 3-3
3-2. OVERALL BLOCK DIAGRAM (2/2) ..... 3-5
3-3. CAMERA/VIDEO BLOCK DIAGRAM (1/2) ..... 3-7
3-4. CAMERA/VIDEO BLOCK DIAGRAM (2/2) ..... 3-9
3-5. USB BLOCK DIAGRAM ..... 3-11
3-6. VTR/CAMERA CONTROL BLOCK DIAGRAM ..... 3-13
3-7. SERVO BLOCK DIAGRAM ..... 3-15
3-8. MODE CONTROL BLOCK DIAGRAM ..... 3-17
3-9. AUDIO BLOCK DIAGRAM ..... 3-19
3-10. LCD BLOCK DIAGRAM ..... 3-21
3-11. EVF BLOCK DIAGRAM ..... 3-23
3-12. POWER BLOCK DIAGRAM (1/2) ..... 3-25
3-13. POWER BLOCK DIAGRAM (2/2) ..... 3-27

### 4. PRINTED WIRING BOARDS AND SCHEMATIC DIAGRAMS

4-1. FRAME SCHEMATIC DIAGRAM (1/2) ..... 4-1
FRAME SCHEMATIC DIAGRAM (2/2) ..... 4-3
4-2. PRINTED WIRING BOARDS AND SCHEMATIC DIAGRAMS ..... 4-5
- CD-354 (CCD IMAGER)
  PRINTED WIRING BOARD AND SCHEMATIC DIAGRAM ..... 4-7
- LB-073 (BACK LIGHT (EVF))
  PRINTED WIRING BOARD AND SCHEMATIC DIAGRAM ..... 4-9
- VF-150 (RGB DRIVE/TG)
  PRINTED WIRING BOARD ..... 4-11
- VF-150 (RGB DRIVE/TG)
  SCHEMATIC DIAGRAM ..... 4-13
- SI-033 (STEADY SHOT, MIC)
  PRINTED WIRING BOARD ..... 4-15
- SI-033 (STEADY SHOT, MIC)
  SCHEMATIC DIAGRAM ..... 4-17
- PD-156 (RGB DRIVE, TIMING GENERATOR, LCD DRIVE, BACKLIGHT DRIVE)
  PRINTED WIRING BOARD ..... 4-19
- PD-156 (RGB DRIVE, TIMING GENERATOR)(1/2)
  SCHEMATIC DIAGRAM ..... 4-23
- PD-156 (LCD DRIVE, BACKLIGHT DRIVE)(2/2)
  SCHEMATIC DIAGRAM ..... 4-25
- CF-2000 (CONTROL SWITCH BLOCK)
  SCHEMATIC DIAGRAM ..... 4-27

• LS-057 (S/T REEL SENSOR), FP-228 (DEW SENSOR), FP-299 (MODE SWITCH), FP-300 (TAPE TOP), FP-302 (TAPE END), FP-301 (TAPE LED) FLEXIBLE BOARDS AND SCHEMATIC DIAGRAMS ····· 4-29
• VC-272 (CAMERA PROCESSOR AMP, Y/C PROCESSOR, FOCUS/ZOOM MOTOR DRIVE, REC/PB AMP, LINE OUT AMP, SERVO, MODE CONTROL, STEADY SHOT, HI CONTROL, AUDIO, DC-DC CONVERTER, CONNECTOR, USB SIGNAL) PRINTED WIRING BOARD ····· 4-31
• VC-272 (CAMERA PROCESSOR AMP)(1/12) SCHEMATIC DIAGRAM ····· 4-35
• VC-272 (Y/C PROCESSOR)(2/12) SCHEMATIC DIAGRAM ····· 4-37
• VC-272 (FOCUS/ZOOM MOTOR DRIVE)(3/12) SCHEMATIC DIAGRAM ····· 4-39
• VC-272 (REC/PB AMP)(4/12) SCHEMATIC DIAGRAM ····· 4-41
• VC-272 (LINE OUT AMP)(5/12) SCHEMATIC DIAGRAM ····· 4-43
• VC-272 (SERVO)(6/12) SCHEMATIC DIAGRAM ····· 4-45
• VC-272 (MODE CONTROL, STEADY SHOT)(7/12) SCHEMATIC DIAGRAM ····· 4-47
• VC-272 (HI CONTROL)(8/12) SCHEMATIC DIAGRAM ····· 4-49
• VC-272 (AUDIO)(9/12) SCHEMATIC DIAGRAM ····· 4-51
• VC-272 (DC-DC CONVERTER)(10/12) SCHEMATIC DIAGRAM ····· 4-53
• VC-272 (CONNECTOR)(11/12) SCHEMATIC DIAGRAM ····· 4-55
• VC-272 (USB SIGNAL PROCESS)(12/12) SCHEMATIC DIAGRAM ····· 4-57
• FP-397 FLEXIBLE BOARD ····· 4-59
4-3. WAVEFORMS ····· 4-60
4-4. MOUNTED PARTS LOCATION ····· 4-63


## 5. ADJUSTMENTS


1. Adjusting items when replacing main parts and boards. ··5-2
5-1. CAMERA SECTION ADJUSTMENT ····· 5-4
1-1. PREPARATIONS BEFORE ADJUSTMENT (CAMERA SECTION) ····· 5-4
1-1-1. List of Service Tools ····· 5-4
1-1-2. Preparations ····· 5-5
1-1-3. Precaution ····· 5-7
1. Setting the Switch ····· 5-7
2. Order of Adjustments ····· 5-7
3. Subjects ····· 5-7
1-2. INITIALIZATION OF D, E, F, 7 PAGE DATA ····· 5-8
1. Initializing the D, E, F, 7 Page Data ····· 5-8
2. Modification of D, E, F, 7 Page Data ····· 5-8
3. D Page Table ····· 5-8
4. F Page table ····· 5-9
5. E Page Table ····· 5-11
6. 7 Page Table ····· 5-11
1-3. CAMERA SYSTEM ADJUSTMENTS ····· 5-12
1. HALL Adjustment ····· 5-12
2. Flange Back Adjustment (Using Minipattern Box) ····· 5-13
3. Flange Back Adjustment (Using Flange Back Adjustment Chart and Subject More Than 500m Away) ····· 5-14
3-1. Flange Back Adjustment (1) ····· 5-14
3-2. Flange Back Adjustment (2) ····· 5-14
4. Flange Back Check ····· 5-15
5. Picture Frame Setting ····· 5-15
6. Color Reproduction Adjustment ····· 5-16
7. Auto White Balance & LV Standard Data Input ····· 5-17
8. Auto White Balance Adjustment ····· 5-18
9. White Balance Check ····· 5-19
10. Steady Shot Check (CCD-TRV308/TRV408/TRV608) ··5-20
1-4. ELECTRONIC VIEWFINDER SYSTEM ADJUSTMENT (CCD-TRV107/TRV308/TRV408/TRV608) ····· 5-21
1. RGB AMP Adjustment (VF-150 board) ····· 5-22
1-1. Automatic Adjustment ····· 5-22
1-2. Manual Adjustment ····· 5-22
2. Contrast Adjustment (VF-150 board) ····· 5-23
2-1. Automatic Adjustment ····· 5-23
2-2. Manual Adjustment ····· 5-23
1-5. LCD SYSTEM ADJUSTMENT ····· 5-24
1. LCD Type Check ····· 5-24
2. VCO Adjustment (PD-156 board) ····· 5-25
3. RGB AMP Adjustment (PD-156 board) ····· 5-25
4. Contrast Adjustment (PD-156 board) ····· 5-26
5. COM AMP Adjustment (PD-156 board) ····· 5-26
6. V-COM Adjustment (PD-156 board) ····· 5-27
7. White Balance Adjustment (PD-156 board) ····· 5-27
5-2. MECHANISM SECTION ADJUSTMENT ····· 5-28
2-1. ADJUSTMENT REMOTE COMMANDER ····· 5-28
2-2. OPERATING WITHOUT CASSETTE ····· 5-28
2-3. TAPE PATH ADJUSTMENT ····· 5-28
1. Preparations for Adjustment ····· 5-28
5-3. VIDEO SECTION ADJUSTMENTS ····· 5-29
3-1. PREPARATIONS BEFORE ADJUSTMENTS ····· 5-29
3-1-1. Equipment to Required ····· 5-29
3-1-2. Precautions on Adjusting ····· 5-30
3-1-3. Adjusting Connectors ····· 5-31
3-1-4. Connecting the Equipment ····· 5-31
3-1-5. Alignment Tape ····· 5-32
3-1-6. Output Level and Impedance ····· 5-32
3-1-7. Recording Mode (Standard 8/Hi8) switching ····· 5-32
3-2. SYSTEM CONTROL SYSTEM ADJUSTMENT ····· 5-33
1. Initialization of D, E, F, 7 Page Data ····· 5-33
3-3. SERVO ADJUSTMENT ····· 5-33
1. CAP FG Offset Adjustment (VC-272 board) ····· 5-33
2. Switching Position Adjustment (VC-272 board) ····· 5-33
3-4. VIDEO SYSTEM ADJUSTMENTS ····· 5-34
1. 28 MHz Origin Oscillation Adjustment (VC-272 board) ·5-34
2. AFC $f_0$ Adjustment (VC-272 board) ····· 5-34
3. Y OUT Level Adjustment (VC-272 board) ····· 5-35
4. C OUT Level Adjustment (VC-272 board) ····· 5-35
5. REC Y Current Adjustment (VC-272 board) ····· 5-36
6. REC C/AFM Current Adjustment ····· 5-37
6-1. Preparations ····· 5-37
6-2. REC C Current Check (VC-272 board) ····· 5-37
6-3. REC AFM Current Adjustment (VC-272 board) ····· 5-38
6-4. Processing after completed adjustment ····· 5-38
3-5. AUDIO SYSTEM ADJUSTMENTS ····· 5-39
1. 1.5 MHz Deviation Adjustment (VC-272 board) ····· 5-39
2. BPF $f_0$ Adjustment (VC-272 board) ····· 5-39
5-4. SERVICE MODE ····· 5-40
4-1. ADJUSTMENT REMOTE COMMANDER ····· 5-40
1. Using the Adjustment Remote Commander ····· 5-40
2. Precautions Upon Using the Adjustment Remote Commander ····· 5-40
4-2. DATA PROCESS ····· 5-41
4-3. SERVICE MODE ····· 5-42
1. Test Mode Setting ····· 5-42
2. Emergency Memory Address ····· 5-43
2-1. EMG code (Emergency code) ····· 5-43
2-2. MSW codes ····· 5-44
3. Bit Value Discrimination ····· 5-45
4. Switch check (1) ····· 5-45

5. Switch check (2) ····· 5-45 ·····
6. Switch check (3) ····· 5-46 ·····
7. Record of Use check ····· 5-46 ·····
8. Record of Self-diagnosis check ····· 5-47 ···

## 6. REPAIR PARTS LIST

6-1. EXPLODED VIEWS ····· 6-1 ·····
6-1-1. OVERALL SECTION ····· 6-1 ·····
6-1-2. F PANEL SECTION ····· 6-2 ·····
6-1-3. CABINET (L) SECTION ····· 6-3 ·····
6-1-4. BATTERY PANEL SECTION ····· 6-4 ·····
6-1-5. EVF SECTION ····· 6-5 ·····
6-1-6. LENS SECTION ····· 6-6 ·····
6-1-7 CABINET (R) SECTION ····· 6-7 ·····
6-1-8 CASSETTE COMPARTMENT ASSY, DRUM ASSY ··· 6-8
6-1-9. LS CHASSIS BLOCK ASSEMBLY ····· 6-9 ···
6-1-10. MECHANICAL CHASSIS BLOCK ASSEMBLY-1 ··· 6-10
6-1-11. MECHANICAL CHASSIS BLOCK ASSEMBLY-2 ··· 6-11
6-2. ELECTRICAL PARTS LIST ····· 6-12 ····

* Color reproduction frame are shown on page 215.

# SERVICE NOTE

## 1. POWER SUPPLY DURING REPAIRS

In this unit, about 10 seconds after power is supplied (8.4V) to the battery terminal, the power is shut off so that the unit cannot operate. The following method is available to prevent this.

**Method:**
Use the DC IN terminal. (Use the AC power adaptor.)

## 2. TO TAKE OUT A CASSETTE WHEN NOT EJECT (FORCE EJECT)

① Refer to 2-5. to remove the front panel assembly.
② Refer to 2-7. to remove the cabinet (R) assembly.
③ Open the control switch block (FK-2000).
④ Refer to 2-6. to remove the cassette lid assembly.
⑤ Refer to 2-6. to remove the cabinet (L) assembly.
⑥ Disconnect CN704 (2P) of VC-272 board.
⑦ Add +5V from the DC POWER SUPPLY and unload with a pressing the cassette compartment.

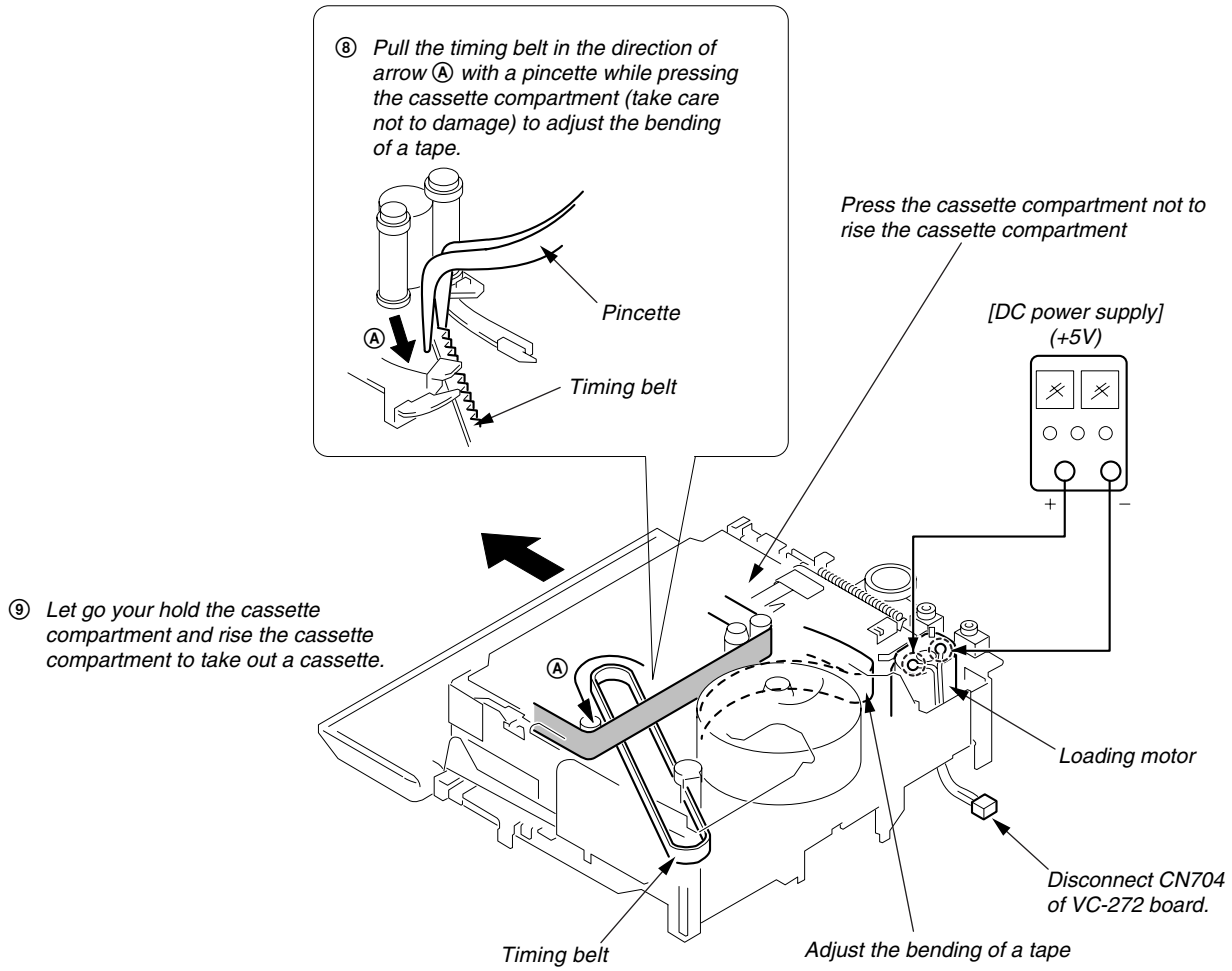

# SELF-DIAGNOSIS FUNCTION

## 1. Self-diagnosis Function

When problems occur while the unit is operating, the self-diagnosis function starts working, and displays on the viewfinder or LCD or Display window what to do. This function consists of two display; self-diagnosis display and service mode display.
Details of the self-diagnosis functions are provided in the Instruction manual.

## 2. Self-diagnosis Display

When problems occur while the unit is operating, the counter of the viewfinder or LCD or Display window shows a 4-digit display consisting of an alphabet and numbers, which blinks at 3.2 Hz. This 5-character display indicates the "repaired by:", "block" in which the problem occurred, and "detailed code" of the problem.

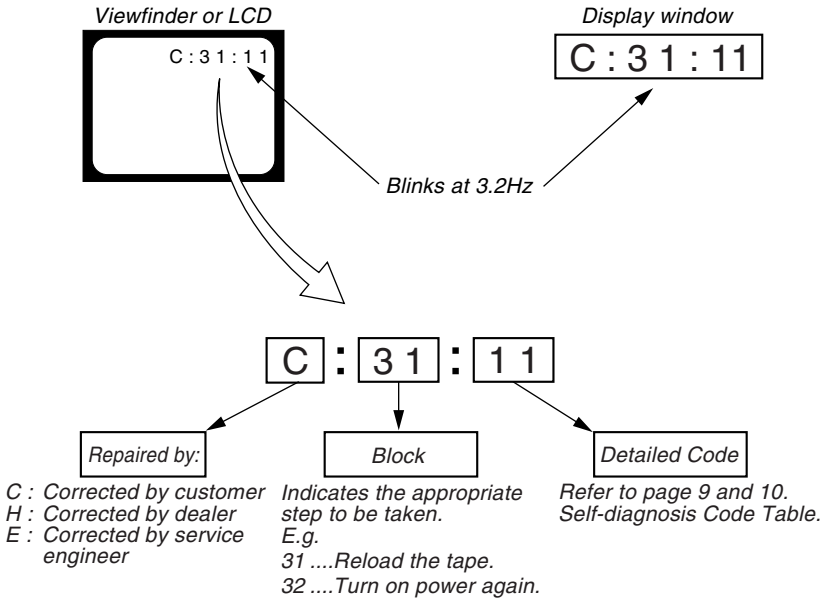


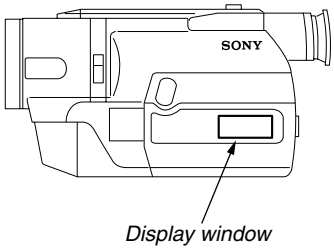


## 3. Service Mode Display

The service mode display shows up to six self-diagnosis codes shown in the past.

### 3-1. Display Method

While pressing the "STOP" key, set the switch from OFF to "VTR or PLAYER", and continue pressing the "STOP" key for 5 seconds continuously. The service mode will be displayed, and the counter will show the backup No. and the 5-character self-diagnosis codes.

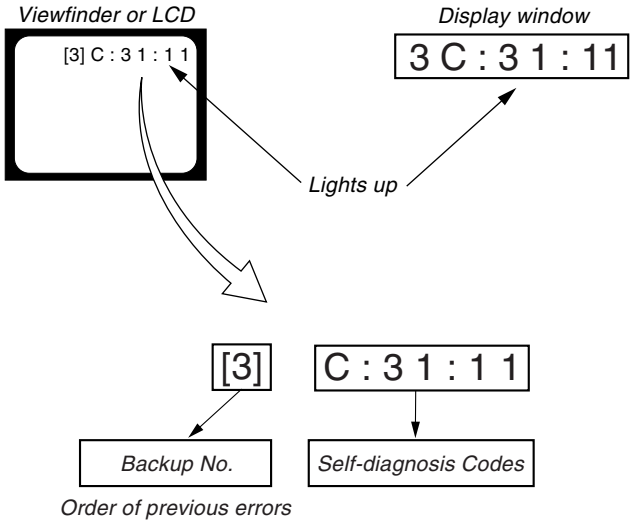


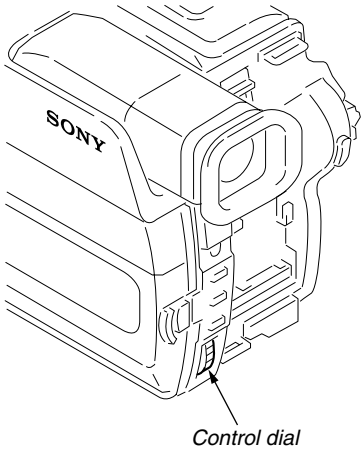


### 3-2. Switching of Backup No.

By rotating the control dial, past self-diagnosis codes will be shown in order. The backup No. in the [] indicates the order in which the problem occurred. (If the number of problems which occurred is less than 6, only the number of problems which occurred will be shown.)

[1] : Occurred first time [4] : Occurred fourth time
[2] : Occurred second time [5] : Occurred fifth time
[3] : Occurred third time [6] : Occurred the last time

### 3-3. End of Display

Turning OFF the power supply will end the service mode display.

**Note:** The "self-diagnosis display" data will be backed up by the built-in rechargeable lithium battery (CF-2000 block BT001). When the cabinet (R) assembly is disconnected, the "self-diagnosis display" data will be lost by initialization.

## 4. Self-diagnosis Code Table

| Self-diagnosis Code | | | | | Symptom/State | Correction |
|---|---|---|---|---|---|---|
| Repaired by: | Block Function | | Detailed Code | | | |
| C | 0 | 4 | 0 | 0 | Non-standard battery is used. | Use the InfoLITHIUM battery. |
| C | 2 | 1 | 0 | 0 | Condensation. | Remove the cassette, and insert it again after one hour. |
| C | 2 | 2 | 0 | 0 | Video head is dirty. | Clean with the optional cleaning cassette. |
| C | 3 | 1 | 1 | 0 | LOAD direction. Loading does not complete within specified time | Load the tape again, and perform operations from the beginning. |
| C | 3 | 1 | 1 | 1 | UNLOAD direction. Loading does not complete within specified time | Load the tape again, and perform operations from the beginning. |
| C | 3 | 1 | 2 | 0 | T reel side tape slacking when unloading. | Load the tape again, and perform operations from the beginning. |
| C | 3 | 1 | 2 | 1 | S reel side tape slacking when unloading. | Load the tape again, and perform operations from the beginning. |
| C | 3 | 1 | 2 | 2 | T reel fault. | Load the tape again, and perform operations from the beginning. |
| C | 3 | 1 | 2 | 3 | S reel fault. | Load the tape again, and perform operations from the beginning. |
| C | 3 | 1 | 3 | 0 | FG fault when starting capstan. | Load the tape again, and perform operations from the beginning. |
| C | 3 | 1 | 3 | 1 | FG fault during normal capstan operations. | Load the tape again, and perform operations from the beginning. |
| C | 3 | 1 | 4 | 0 | FG fault when starting drum. | Load the tape again, and perform operations from the beginning. |
| C | 3 | 1 | 4 | 1 | PG fault when starting drum. | Load the tape again, and perform operations from the beginning. |
| C | 3 | 1 | 4 | 2 | FG fault during normal drum operations. | Load the tape again, and perform operations from the beginning. |
| C | 3 | 1 | 4 | 3 | PG fault during normal drum operations. | Load the tape again, and perform operations from the beginning. |
| C | 3 | 1 | 4 | 4 | Phase fault during normal drum operations. | Load the tape again, and perform operations from the beginning. |
| C | 3 | 2 | 1 | 0 | LOAD direction loading motor time-out. | Remove the battery or power cable, connect, and perform operations from the beginning. |
| C | 3 | 2 | 1 | 1 | UNLOAD direction loading motor time-out. | Remove the battery or power cable, connect, and perform operations from the beginning. |
| C | 3 | 2 | 2 | 0 | T reel side tape slacking when unloading. | Remove the battery or power cable, connect, and perform operations from the beginning. |
| C | 3 | 2 | 2 | 1 | S reel side tape slacking when unloading. | Remove the battery or power cable, connect, and perform operations from the beginning. |
| C | 3 | 2 | 2 | 2 | T reel fault. | Remove the battery or power cable, connect, and perform operations from the beginning. |
| C | 3 | 2 | 2 | 3 | S reel fault. | Remove the battery or power cable, connect, and perform operations from the beginning. |
| C | 3 | 2 | 3 | 0 | FG fault when starting capstan. | Remove the battery or power cable, connect, and perform operations from the beginning. |
| C | 3 | 2 | 3 | 1 | FG fault during normal capstan operations. | Remove the battery or power cable, connect, and perform operations from the beginning. |
| C | 3 | 2 | 4 | 0 | FG fault when starting drum. | Remove the battery or power cable, connect, and perform operations from the beginning. |
| C | 3 | 2 | 4 | 1 | PG fault when starting drum. | Remove the battery or power cable, connect, and perform operations from the beginning. |
| C | 3 | 2 | 4 | 2 | FG fault during normal drum operations. | Remove the battery or power cable, connect, and perform operations from the beginning. |
| C | 3 | 2 | 4 | 3 | PG fault during normal drum operations. | Remove the battery or power cable, connect, and perform operations from the beginning. |
| C | 3 | 2 | 4 | 4 | Phase fault during normal drum operations. | Remove the battery or power cable, connect, and perform operations from the beginning. |

| Self-diagnosis Code | | | Symptom/State | Correction |
|---|---|---|---|---|
| Repaired by: | Block Function | Detailed Code | | |
| E | 6 1 | 0 0 | Difficult to adjust focus (Cannot initialize focus.) | Inspect the lens block focus reset sensor (Pin ⑫ of CN301 of VC-272 board) when focusing is performed when the control dial is rotated in the focus manual mode and the focus motor drive circuit (IC301 of VC-272 board) when the focusing is not performed. |
| E | 6 1 | 1 0 | Zoom operations fault (Cannot initialize zoom lens.) | Inspect the lens block zoom reset sensor (Pin ⑭ of CN301 of VC-272 board) when zooming is performed when the zoom switch is operated and the zoom motor drive circuit (IC301 of VC-272 board) when zooming is not performed. |
| E | 6 2 | 0 0 | Handshake correction function does not work well. (With pitch angular velocity sensor output stopped.) | Inspect pitch angular velocity sensor (SE750 of SI-033 board) peripheral circuits. *1 |
| E | 6 2 | 0 1 | Handshake correction function does not work well. (With yaw angular velocity sensor output stopped.) | Inspect yaw angular velocity sensor (SE751 of SI-033 board) peripheral circuits. *1 |

*1: STEADY SHOT model (CCD-TRV308/TRV408/TRV608)

# SECTION 1
# GENERAL

This section is extracted from instruction manual.

## Main Features

**Taking moving images, and playing them back**
- Recording a picture (p. 19)
- Playing back a tape (p. 29)

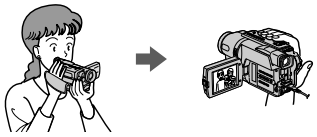

**Capturing images on your computer***1)
- Viewing images recorded on a tape (p. 59)
- Viewing images live from your camcorder (p. 59)

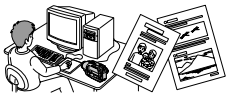

**Others**

**Functions to adjust exposure in the recording mode**
- BACK LIGHT (p. 25)
- NightShot (p. 26)
- PROGRAM AE (p. 38)
- Built-in light*2) (p. 46)
- Manual exposure (p. 40)

**Functions to give images more impact**
- Digital zoom (p. 22)
  The default setting is set to **OFF**. (To zoom greater than 20×, select the digital zoom power in **D ZOOM** in the menu settings.)
- FADER (p. 35)
- Picture effect (p. 37)
- TITLE (p. 42)

**Function to give a natural appearance to your recordings**
- Manual focus (p. 41)

**Functions to use in editing in the recording mode**
- Wide mode (p. 33)
- Date and time (p. 16)
- ORC [MENU] (p. 70)

**Function to use after recording**
- Easy Dubbing (p. 51)

**Function to make transition smooth**
- END SEARCH (P.28)

*1) CCD-TRV608 only
*2) CCD-TRV107 / TRV308 / TRV408 / TRV608 only





## Quick Start Guide

This chapter introduces you to the basic features of your camcorder. See the page in parentheses "( )" for more information.

### 1 Connecting the power cord (p. 15)

Use the battery pack when using your camcorder outdoors (p. 11).

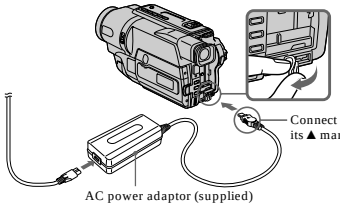


### 2 Inserting a cassette (p. 18)

1. Open the lid of the cassette compartment, and press ⏏ EJECT. The cassette compartment opens automatically.

2. Insert a cassette into the cassette compartment with its window facing out and the write-protect tab on the cassette up.
3. Close the cassette compartment by pressing the PUSH mark on the cassette compartment. The cassette compartment automatically goes down.
   Close the lid of the cassette compartment.

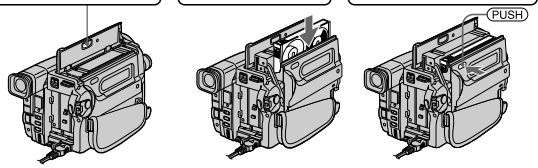




### 3 Recording a picture (p. 19)

1. Remove the lens cap.
2. Set the POWER switch to CAMERA while pressing the small green button.

3. Open the LCD panel while pressing OPEN. The picture appears on the LCD screen.

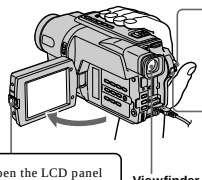

4. Press START / STOP. Your camcorder starts recording. To stop recording, press START / STOP again.

**Viewfinder**
When the LCD panel is closed, use the viewfinder placing your eye against its eyecup. The picture in the viewfinder is black and white. Adjust the viewfinder lens to your eyesight (p. 23).

When you purchase your camcorder, the clock setting is set to off. If you want to record the date and time for a picture, set the clock setting before recording (p. 16).

### 4 Monitoring the playback picture on the LCD screen (p. 29)

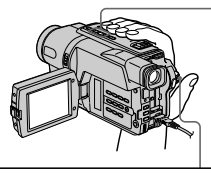

1. Set the POWER switch to PLAYER while pressing the small green button.



2. Press ◀◀ to rewind the tape.




3. Press ▶ to start playback.




**Note**
Do not pick up your camcorder by the viewfinder, the LCD panel, or the battery pack.

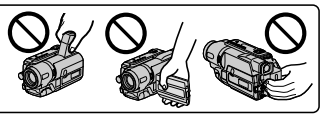

— Getting started —

# Using this manual

The instructions in this manual are for the five models listed in the table below. Before you start reading this manual and operating your camcorder, check the model number by looking at the bottom of your camcorder. The CCD-TRV608 is the model used for illustration purposes. Otherwise, the model name is indicated in the illustrations. Any differences in operation are clearly indicated in the text, for example, "CCD-TRV608 only."
As you read through this manual, buttons and settings on your camcorder are shown in capital letters.
e.g. Set the POWER switch to CAMERA.
When you carry out an operation, you can hear a beep sound to indicate that the operation is being carried out.

**Types of differences**

| CCD- | TRV107 | TRV108 | TRV308 | TRV408 | TRV608 |
|---|---|---|---|---|---|
| Digital Zoom | 450× | 460× | 460× | 560× | 560× |
| LCD Screen | 6.2 cm (2.5 type) | 6.2 cm (2.5 type) | 6.2 cm (2.5 type) | 6.2 cm (2.5 type) | 7.5 cm (3 type) |
| Built-in light | ● | — | ● | ● | ● |
| Remote sensor | ● | — | — | ● | — |
| SteadyShot | — | — | ● | ● | ● |
| USB Streaming | — | — | — | — | ● |
| VF B.L. (Viewfinder backlight) | ● | — | ● | ● | ● |

● Provided
— Not provided





## Note on TV color systems

TV color systems differ from country to country. To view your recordings on a TV, you need an NTSC system-based TV.

## Precautions on camcorder care

### Lens and LCD screen/finder (on mounted models only)

- **The LCD screen and the finder are manufactured using extremely high-precision technology so over 99.99% of the pixels are operational for effective use. However, there may be some tiny black points and/or bright points (white, red, blue or green in color) that constantly appear on the LCD screen and the finder. These points are normal in the manufacturing process and do not affect the recording in any way.**
- Do not let your camcorder get wet. Keep your camcorder away from rain and sea water. Letting your camcorder get wet may cause your camcorder to malfunction. Sometimes this malfunction cannot be repaired **[a]**.
- Never leave your camcorder exposed to temperatures above 60°C (140°F), such as in a car parked in the sun or under direct sunlight **[b]**.
- Be careful when placing the camera near a window or outdoors. Exposing the LCD screen, the finder or the lens to direct sunlight for long periods may cause malfunctions **[c]**.
- Do not directly shoot the sun. Doing so might cause your camcorder to malfunction. Take pictures of the sun in low light conditions such as dusk **[d]**.

**[a]**

**[b]**

**[c]**

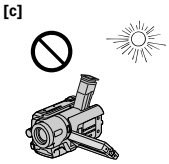

**[d]**

# Checking supplied accessories

Make sure that the following accessories are supplied with your camcorder.

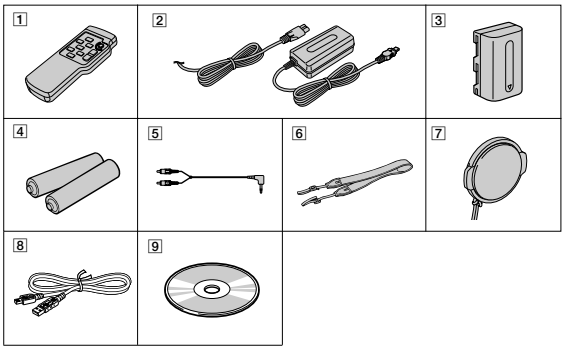


1 **Wireless Remote Commander** (CCD-TRV107 / TRV408 only) (1) (p. 96)

2 **AC-L10A/L10B/L10C AC power adaptor** (1), **Power cord** (1) (p. 15)

3 **NP-FM30 battery pack** (1) (p. 11, 12)

4 **Size AA (R6) battery for Remote Commander** (CCD-TRV107 / TRV408 only) (2) (p. 96)

5 **A/V connecting cable** (1) (p. 32)

6 **Shoulder strap** (1) (p. 91)

7 **Lens cap** (1) (p. 19, 95)

8 **USB Cable** (CCD-TRV608 only) (1) (p. 59)

9 **CD-ROM (SPVD-008 USB Driver)** (CCD-TRV608 only) (1) (p. 60)

Contents of the recording cannot be compensated if recording or playback is not made due to a malfunction of the camcorder, storage media, etc.



# Step 1 Preparing the power supply

## Installing the battery pack

Slide the battery pack down until it clicks.

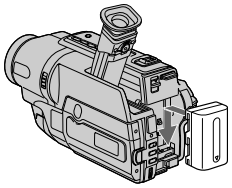

### To remove the battery pack

Slide the battery pack out in the direction of the arrow while pressing ▼ BATT down.

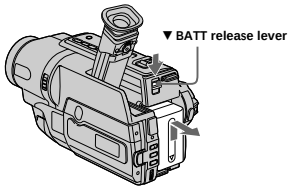

## Step 1 Preparing the power supply

### Charging the battery pack

Use the battery pack after charging it for your camcorder.
Your camcorder operates only with the "InfoLITHIUM" battery pack (M series).
See page 81 for details of the "InfoLITHIUM" battery pack.

**(1)** Open the DC IN jack cover and connect the AC power adaptor supplied with your camcorder to the DC IN jack with the plug's ▲ mark facing up.
**(2)** Connect the power cord to the AC power adaptor.
**(3)** Connect the power cord to a wall outlet.
**(4)** Set the POWER switch to OFF (CHG). Charging begins. The remaining battery time is indicated in minutes on the display window.

When the remaining battery indicator changes to **normal charge** is completed. To fully charge the battery **(full charge)**, leave the battery pack attached for about one hour after normal charge is completed until "FULL" appears in the display window. Fully charging the battery allows you to use the battery longer than usual.

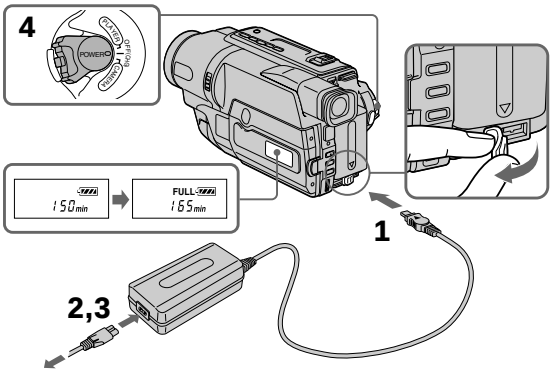


The number in the illustration of the display window may differ from that on your camcorder.

### After charging the battery pack

Disconnect the AC power adaptor from the DC IN jack on your camcorder.



## Step 1 Preparing the power supply

**Note**

Prevent metallic objects from coming into contact with the metal parts of the DC plug of the AC power adaptor. This may cause a short-circuit, damaging the AC power adaptor.

**Remaining battery time indicator**

The remaining battery time you record with the viewfinder is displayed.
The remaining battery time indicator in the display window roughly indicates the recording time with the viewfinder.

**Until your camcorder calculates the actual remaining battery time**

"– – – – min" appears in the display window.

**While charging the battery pack, no indicator appears or the indicator flashes in the display window in the following cases:**

– The AC power adaptor is disconnected.
– The battery pack is not installed properly.
– Something is wrong with the battery pack.

**We recommend charging the battery pack in an ambient temperature of between 10°C to 30°C (50°F to 86°F).**

**If the power goes off although the battery remaining indicator indicates that the battery pack has enough power to operate**

Charge the battery pack fully again so that the indication on the battery remaining indicator is correct.

### Charging time

| Battery pack | Full charge (normal charge) |
|---|---|
| NP-FM30 (supplied) | 145 (85) |
| NP-FM50 | 150 (90) |
| NP-FM70 | 240 (180) |
| NP-QM71 | 260 (200) |
| NP-FM90 | 330 (270) |
| NP-FM91 / QM91 | 360 (300) |

Approximate number of minutes to charge an empty battery pack at 25°C (77°F)

### Recording time

**CCD-TRV107/TRV108/TRV308/TRV408**

| Battery pack | Recording with the viewfinder | | Recording with the LCD screen | |
|---|---|---|---|---|
| | Continuous* | Typical** | Continuous* | Typical** |
| NP-FM30 (supplied) | 165 | 90 | 120 | 65 |
| NP-FM50 | 265 | 145 | 195 | 105 |
| NP-FM70 | 540 | 295 | 400 | 220 |
| NP-QM71 | 640 | 350 | 465 | 255 |
| NP-FM90 | 820 | 450 | 600 | 330 |
| NP-FM91 / QM91 | 955 | 525 | 695 | 380 |





## Step 1 Preparing the power supply

**CCD-TRV608**

| Battery pack | Recording with the viewfinder | | Recording with the LCD screen | |
|---|---|---|---|---|
| | Continuous* | Typical** | Continuous* | Typical** |
| NP-FM30 (supplied) | 165 | 90 | 100 | 55 |
| NP-FM50 | 265 | 145 | 160 | 90 |
| NP-FM70 | 540 | 295 | 335 | 185 |
| NP-QM71 | 640 | 350 | 390 | 215 |
| NP-FM90 | 820 | 450 | 505 | 275 |
| NP-FM91 / QM91 | 955 | 525 | 585 | 320 |

Approximate number of minutes when you use a fully charged battery pack

* Approximate continuous recording time at 25°C (77°F). The battery life will be shorter if you use your camcorder in a cold environment.
** Approximate number of minutes when recording while you repeat recording start / stop, zooming and turning the power on / off. The actual battery life may be shorter.

### Playing time

**CCD-TRV107/TRV108/TRV308/TRV408**

| Battery pack | Playing time on LCD screen | Playing time with LCD closed |
|---|---|---|
| NP-FM30 (supplied) | 120 | 175 |
| NP-FM50 | 195 | 280 |
| NP-FM70 | 400 | 570 |
| NP-QM71 | 465 | 675 |
| NP-FM90 | 600 | 865 |
| NP-FM91 / QM91 | 695 | 1010 |

**CCD-TRV608**

| Battery pack | Playing time on LCD screen | Playing time with LCD closed |
|---|---|---|
| NP-FM30 (supplied) | 100 | 175 |
| NP-FM50 | 160 | 280 |
| NP-FM70 | 335 | 570 |
| NP-QM71 | 390 | 675 |
| NP-FM90 | 505 | 865 |
| NP-FM91 / QM91 | 585 | 1010 |

Approximate number of minutes when you use a fully charged battery pack

Approximate continuous playing time at 25°C (77°F). The battery life will be shorter if you use your camcorder in a cold environment.
The recording and playing time of a normally charged battery are about 90% of those of a fully charged battery.

**What is the "InfoLITHIUM"?**

The "InfoLITHIUM" is a lithium ion battery pack which can exchange data such as battery consumption with compatible electronic equipment. This unit is compatible with the "InfoLITHIUM" battery pack (M series). Your camcorder operates only with the "InfoLITHIUM" battery pack. "InfoLITHIUM" M series battery packs have the mark.
"InfoLITHIUM" is a trademark of Sony Corporation.



## Step 1 Preparing the power supply

### Connecting to a wall outlet

When you use your camcorder for a long time, we recommend that you power it from a wall outlet using the AC power adaptor.

**(1)** Open the DC IN jack cover, and connect the AC power adaptor to the DC IN jack on your camcorder with the plug's ▲ mark facing up.
**(2)** Connect the power cord to the AC power adaptor.
**(3)** Connect the power cord to a wall outlet.

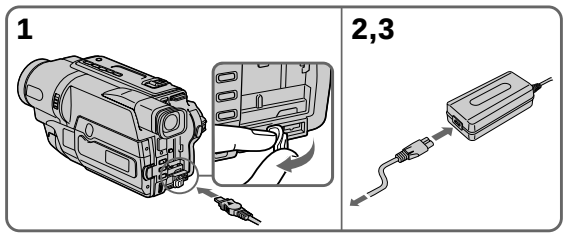


**PRECAUTION**

The set is not disconnected from the AC power source (wall outlet) as long as it is connected to the wall outlet, even if the set itself has been turned off.

**Notes**

- The AC power adaptor can supply power even if the battery pack is attached to your camcorder.
- The DC IN jack has "source priority." This means that the battery pack cannot supply any power if the power cord is connected to the DC IN jack, even when the power cord is not plugged into a wall outlet.
- Place the AC power adaptor near a wall outlet.
  While using the AC power adaptor, if any trouble occurs with this unit, disconnect the plug from the wall outlet as soon as possible to cut off the power.

**Using a car battery**

Use Sony DC Adaptor / Charger (optional). Refer to the operating instructions of the DC Adaptor / Charger for further information.

## Step 2 Setting the date and time

Set the date and time settings when you use your camcorder for the first time.
"CLOCK SET" will be displayed each time when you set the power switch to CAMERA unless you set the date and time settings.
If you do not use your camcorder for about 6 months, the date and time settings may be released (bars may appear) because the built-in rechargeable battery in your camcorder will have been discharged.
First, set the year, then the month, the day, the hour and then the minute.

**(1)** While your camcorder is in CAMERA mode, press MENU to display the menu.
**(2)** Turn the SEL / PUSH EXEC dial to select [CAM], then press the dial.
**(3)** Turn the SEL / PUSH EXEC dial to select CLOCK SET, then press the dial.
**(4)** Turn the SEL / PUSH EXEC dial to adjust the desired year, then press the dial.
**(5)** Set the month, day and hour by turning the SEL / PUSH EXEC dial and pressing the dial.
**(6)** Set the minute by turning the SEL / PUSH EXEC dial and pressing the dial by the time signal. The clock starts to operate.
**(7)** Press MENU to make the menu disappear. The time indicator appears.





### To check the preset date and time

Press DATE to display the date indicator.
Press TIME to display the time indicator.
Press DATE (or TIME) and then press TIME (or DATE) to simultaneously display the date and time indicator.
Press DATE and / or TIME again. The date and / or time indicator disappears.

**The year changes as follows:**

→ 1995 ←· · · ·→ 2002 ←· · · ·→ 2079 ←

**Auto date function**
When you use your camcorder for the first time, turn it on and set the date and time to your local time before you start recording (p. 16). The date is automatically recorded for 10 seconds after you start recording **(Auto date function)**. This function works only once a day.

**Note on the time indicator**
The internal clock of your camcorder operates on a 12-hour cycle.
• 12:00 AM stands for midnight.
• 12:00 PM stands for noon.

**Note on the auto date function**
You can change the AUTO DATE setting by selecting ON or OFF in the menu settings.
The auto date function automatically displays the date once a day.
However, the date may automatically appear more than once a day if:
– you set the date and time.
– you eject and insert the tape again.
– you stop recording within 10 seconds.
– you set AUTO DATE to OFF once and set it back to ON in the menu settings.





## Step 3 Inserting a cassette

When you want to record in the Hi8 Hi8 system, use Hi8 Hi8 video cassettes.

**(1)** Prepare the power supply (p. 11).
**(2)** Open the lid of the cassette compartment, and press ⏏ EJECT. The cassette compartment opens automatically.
**(3)** Insert a cassette into the cassette compartment with its window facing out and the write-protect tab on the cassette up.
**(4)** Close the cassette compartment by pressing the PUSH mark on the cassette compartment. The cassette compartment automatically goes down.
**(5)** Close the lid of the cassette compartment.

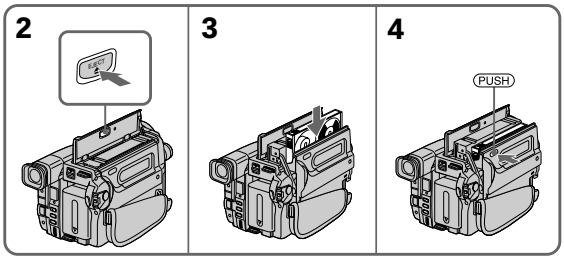


### To eject a cassette

Follow the procedure above, and eject the cassette in step **3**.

**Notes**
• Do not press the cassette compartment down. Doing so may cause a malfunction.
• The cassette compartment may not be closed when you press any part of the cassette compartment other than the PUSH mark.
• Do not pick up your camcorder by the lid of the cassette compartment.

**To prevent accidental erasure**
Slide the write-protect tab on the cassette to expose the red mark.

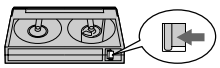





## Recording a picture

Your camcorder automatically focuses for you.

**(1)** Remove the lens cap by pressing both knobs on its sides and attach the lens cap to the grip strap.
**(2)** Install the power source and insert a cassette. See "Step 1" to "Step 3" for more information (p. 11 to 18).
**(3)** Set the POWER switch to CAMERA while pressing the small green button. Your camcorder is set to the standby mode.
**(4)** Open the LCD panel while pressing OPEN. The viewfinder automatically turns off.
**(5)** Press START / STOP. Your camcorder starts recording. The REC indicator appears. The recording lamp located on the front of your camcorder lights up. To stop recording, press START / STOP again.
The recording lamp lights up in the viewfinder when you record with the viewfinder.

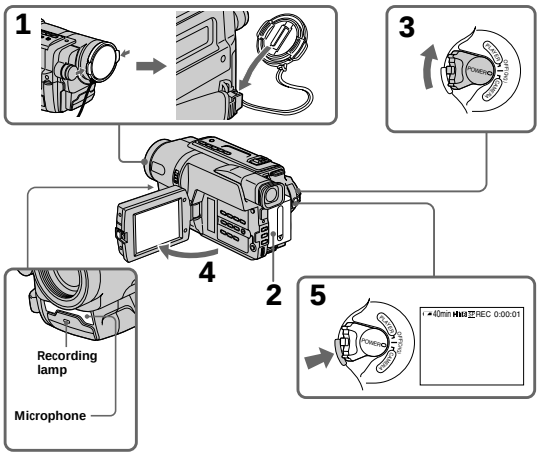


**Notes**
• Fasten the grip strap firmly.
• Do not touch the built-in microphone during recording.

**Note on Recording mode**
Your camcorder records and plays back in the SP (standard play) mode and in the LP (long play) mode. Select SP or LP in the menu settings (p. 70). In the LP mode, you can record twice as long as in the SP mode. When you record a tape in the LP mode on your camcorder, we recommend that you play back the tape on your camcorder.

**To enable smooth transition**
You can make the transition between the last scene you recorded and the next scene smooth as long as you do not eject the cassette even if you turn off your camcorder. When you change the battery pack, set the POWER switch to OFF (CHG).

**If you leave your camcorder in the standby mode for 5 minutes while the cassette is inserted**
Your camcorder automatically turns off. This is to save battery power and to prevent battery and tape wear. To resume the standby mode for recording, set the POWER switch to OFF (CHG) once, then turn it to CAMERA, or press START/STOP without chainging the POWER switch again to start recording. If your camcorder is in the standby mode, with no cassette inserted, it does not turn off automatically.

**When you record in the SP and LP modes on one tape or you record some scenes in the LP mode**
The playback picture may be distorted.

**To set the counter to 0:00:00**
Press COUNTER RESET (p. 94).

## Adjusting the LCD screen

The LCD panel moves about 90 degrees to the viewfinder side and about 180 degrees to the lens side.
If you turn the LCD panel over so that it faces the other way, the indicator appears on the screen **(Mirror mode)**.

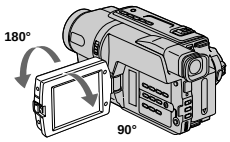


When closing the LCD panel, set it vertically until it clicks, and swing it into the camcorder body.

**Note**
When using the LCD screen except in the mirror mode, the viewfinder automatically turns off.

**When you use the LCD screen outdoors in direct sunlight**
The LCD screen may be difficult to see. If this happens, we recommend that you record with the viewfinder.

**When you adjust angles of the LCD panel**
Be sure to open the LCD panel up to 90 degrees.

**Picture in the mirror mode**
The picture on the LCD screen is a mirror-image. However, the picture will be normal when recorded.





**During recording in the mirror mode**
DATE and TIME on your camcorder do not work.

**Indicators in the mirror mode**
- The STBY indicator appears as ❚❚● and REC as ●. Some of other indicators appear mirror-reversed and others are not displayed.
- The date appears mirror-reversed when the auto date function is working. However, the date will be normal when recorded.

## Adjusting the brightness of the LCD screen

**(1)** In CAMERA mode, select LCD BRIGHT in in the menu settings (p. 69).
**(2)** Turn the SEL/PUSH EXEC dial to adjust the brightness of the LCD screen.

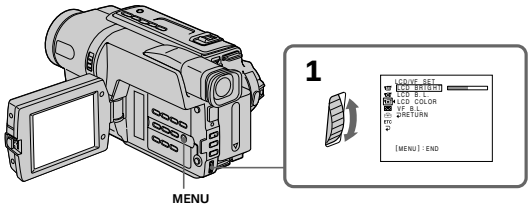


**LCD screen backlight**
You can adjust the brightness of the backlight. Select LCD B.L. in the menu settings (p. 69).

**Even if you adjust the LCD screen backlight**
The recorded picture will not be affected.

## After recording

**(1)** Set the POWER switch to OFF (CHG).
**(2)** Close the LCD panel.
**(3)** Eject the cassette.
**(4)** Attach the lens cap.

**After using your camcorder (CCD-TRV107/TRV308/TRV408/TRV608 only)**
Remove the battery pack from your camcorder to avoid turning on the built-in light accidentally.







## Using the zoom feature

Move the power zoom lever a little for a slower zoom. Move it further for a faster zoom. Using the zoom function sparingly results in better-looking recordings.
"T" side: for telephoto (subject appears closer)
"W" side: for wide-angle (subject appears farther away)

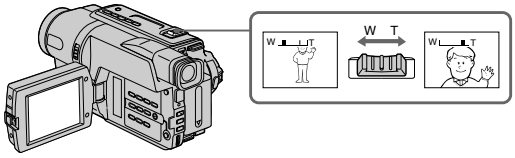


**To use zoom greater than 20×**
Zoom greater than 20× is performed digitally. To activate digital zoom, select the digital zoom power in D ZOOM in the menu settings. The digital zoom function is set to OFF as a default setting (p. 68).
The picture quality deteriorates as the picture is processed digitally.

The right side of the bar shows the digital zooming zone.
The digital zooming zone appears when you select the digital zoom power in D ZOOM in the menu settings.

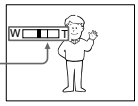


**Notes on digital zoom**
- Digital zoom starts to function when zoom exceeds 20×.
- The picture quality deteriorates as you go toward the "T" side.

**When you shoot close to a subject**
If you cannot get a sharp focus, move the power zoom lever to the "W" side until the focus is sharp. You can shoot a subject that is at least about 80 cm (about 2 feet 5/8 in.) away from the lens surface in the telephoto position, or about 1 cm (about 1/2 in.) away in the wide-angle position.





## To record pictures with the viewfinder – Adjusting the viewfinder

If you record pictures with the LCD panel closed, check the picture with the viewfinder. Adjust the viewfinder lens to your eyesight so that the indicators in the viewfinder come into sharp focus.

Lift up the viewfinder and move the viewfinder lens adjustment lever.

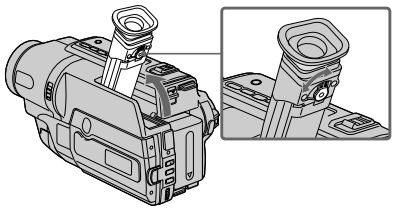

**Viewfinder backlight (CCD-TRV107/TRV308/TRV408/TRV608 only)**
You can change the brightness of the backlight. Select VF B.L. in the menu settings (p. 69).

## Indicators displayed in the recording mode

The indicators are not recorded on tape.

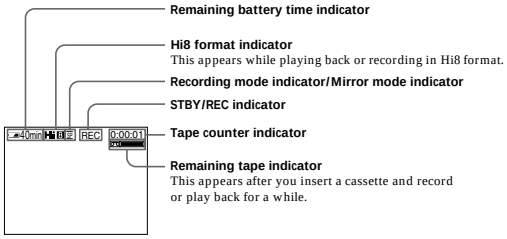


**Remaining battery time indicator**
The remaining battery time indicator indicates the approximate recording time. The indicator may not be correct, depending on the conditions in which you are recording. When you close the LCD panel and open it again, it takes about 1 minute for the correct remaining battery time in minutes to be displayed.





## Shooting backlit subjects – BACK LIGHT

When you shoot a subject with the light source behind the subject or a subject with a light background, use the backlight function.

Press BACK LIGHT in CAMERA mode.
The indicator appears on the screen.
To cancel, press BACK LIGHT again.

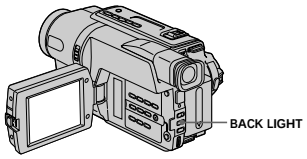


**If you press EXPOSURE when shooting backlit subjects**
The backlight function will be canceled.







## Shooting in the dark – NightShot

The NightShot function enables you to shoot a subject in a dark place. For example, you can satisfactorily record the environment of nocturnal animals for observation when you use this function.

While your camcorder is in CAMERA mode, slide NIGHTSHOT to ON.
and "NIGHTSHOT" indicators flash on the screen.
To cancel the NightShot function, slide NIGHTSHOT to OFF.

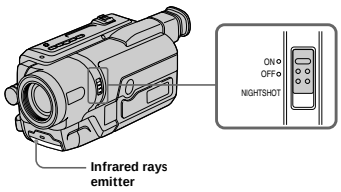


### Using the NightShot Light

The picture will be clearer with the NightShot Light on. To enable the NightShot Light, set N.S.LIGHT to ON in the menu settings (p. 68).

**Notes**
- Do not use the NightShot function in bright places (ex. outdoors in the daytime). This may cause your camcorder to malfunction.
- When you keep NIGHTSHOT setting to ON in normal recording, the picture may be recorded in incorrect or unnatural colors.
- If focusing is difficult with the autofocus mode when using the NightShot function, focus manually.

**While using the NightShot function, you cannot use the following functions:**
– Exposure
– PROGRAM AE

**NightShot Light**
NightShot Light rays are infrared and so are invisible. The maximum shooting distance using the NightShot Light is about 3 m (10 feet).





## Superimposing the date and time on pictures

You can record the date and / or time displayed on the screen superimposed on the picture.
Carry out the following operations in CAMERA mode.

Press DATE to record the date.
Press TIME to record the time.
Press DATE (or TIME), then press TIME (or DATE) to record the date and time.

Press DATE and / or TIME again. The date and / or time indicator disappears.

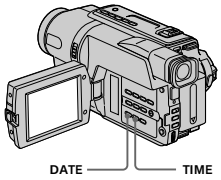


When you purchase your camcorder, the clock setting is set to off. Set the date and time to your local time before using (p. 16).

**Note**
The date and time indicators recorded manually cannot be deleted.

**If you do not record the date and time in the picture**
Record the date and time in the black screen as the background for about 10 seconds, then erase the date and time indicators before starting actual recording.

## Checking the recording – END SEARCH

You can use this button to record a picture from the last recorded scene successively.

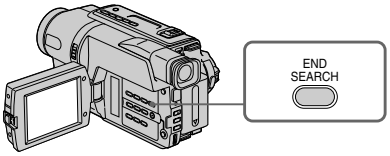


You can go to the end of the recorded section after you record.

Press END SEARCH in CAMERA mode.
The last 5 seconds of the recorded section are played back and returns to the standby mode. You can monitor the sound from the speaker.

**Notes**
- If you start recording after using the end search function, occasionally, the transition between the last scene you recorded and the next scene may not be smooth.
- Once you eject the cassette after you have recorded on the tape, the end search function does not work.





## Playing back a tape

You can monitor the playback picture on the LCD screen. If you close the LCD panel, you can monitor the playback picture in the viewfinder.
**(1)** Install the power source and insert the recorded tape.
**(2)** Set the POWER switch to PLAYER while pressing the small green button.
**(3)** Open the LCD panel while pressing OPEN.
**(4)** Press ◄◄ to rewind the tape.
**(5)** Press ► to start playback.
**(6)** To adjust the volume, press either of the two VOLUME buttons. The speaker on your camcorder is silent when the LCD panel is closed.

You can control playback using the Remote Commander supplied with your camcorder. (CCD-TRV107 / TRV408 only)

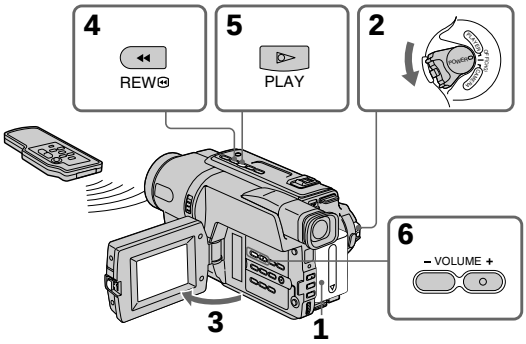


CCD-TRV408

### To stop playback
Press ■.







**When monitoring on the LCD screen**
You can turn the LCD panel over and move it back to the camcorder body with the LCD screen facing out **[a]**. You can adjust the angle of the LCD panel by lifting the LCD panel up by 7 degrees **[b]**.

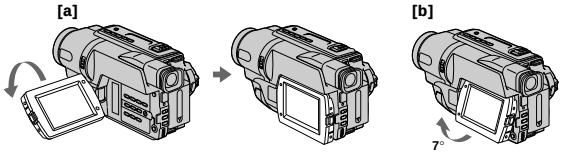


### To display the screen indicators – Display function

Press DISPLAY on your camcorder or the Remote Commander (CCD-TRV107 / TRV408 only) supplied with your camcorder.
The indicators appear on the screen.
To make the indicators disappear, press DISPLAY again.

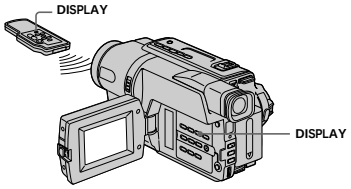


CCD-TRV408





### Various playback modes

To operate video control buttons, set the POWER switch to PLAYER.

**To view a still image (playback pause)**
Press ❚❚ during playback. To resume playback, press ❚❚ or ►.

**To advance the tape**
Press ►► in the stop mode. To resume normal playback, press ►.

**To rewind the tape**
Press ◄◄ in the stop mode. To resume normal playback, press ►.

**To locate a scene monitoring the picture (picture search)**
Keep pressing ◄◄ or ►► during playback. To resume normal playback, release the button.

**To monitor the high-speed picture while advancing or rewinding the tape (skip scan)**
Keep pressing ◄◄ while rewinding or ►► while advancing the tape. To resume rewinding or advancing, release the button.

**To view the picture at slow speed (slow playback) (CCD-TRV107/TRV408 only)**
Press ❚► on the Remote Commander during playback. To resume normal playback, press ►.

**To search the last scene recorded (END SEARCH)**
Press END SEARCH in the stop mode. The last 5 seconds of the recorded section are played back and the playback stops.

**In the various playback modes**
Sound is muted.

**When the playback pause mode lasts for 5 minutes**
Your camcorder automatically enters the stop mode. To resume playback, press ►.

**If slow playback lasts for about 1 minute (CCD-TRV107/TRV408 only)**
Your camcorder automatically returns to normal speed.

**When you play back a tape recorded in the LP mode**
Noise may appear during playback pause mode, slow playback* or picture search.

**When you play back a tape in reverse**
Horizontal noise may appear at the center or top and bottom of the screen. This is not a malfunction.

* CCD-TRV107 / TRV408 only

## Viewing the recording on TV

Connect your camcorder to your TV with the A / V connecting cable supplied with your camcorder to watch the playback picture on the TV screen. You can operate the playback control buttons in the same way as when you monitor playback pictures on the LCD screen. We recommend that you power your camcorder from a wall outlet using the AC power adaptor, when monitoring the playback picture on the TV screen (p. 15). Refer to the operating instructions of your TV.

Open the jack cover. Connect your camcorder to the TV using the A / V connecting cable. Then, set the TV / VCR selector on the TV to VCR.

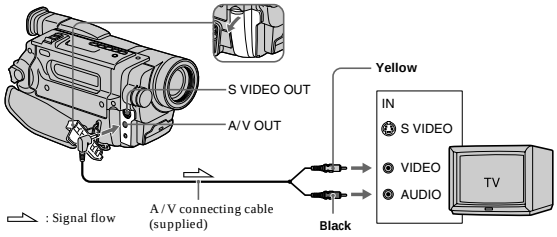


### If your TV is already connected to a VCR

Connect your camcorder to the LINE IN input on the VCR by using the A / V connecting cable supplied with your camcorder. Set the input selector on the VCR to LINE.

### To connect to a TV without Video/Audio input jacks

Use an NTSC system RFU adaptor (optional). Refer to the operating instructions of your TV and the RFU adaptor.

### If your TV is a stereo type

Connect the audio plug of the A / V connecting cable supplied to the left (white) input jack of your TV.

**If your TV has an S video jack**
Connect using an S video cable (optional) to obtain optimum quality screen images. With this connection, you do not need to connect the yellow (video) plug of the A / V connecting cable.
Connect an S video cable (optional) to the S video jacks on both your camcorder and the TV.

**To display the screen indicators on TV**
Set DISPLAY to V-OUT / LCD in the menu settings (p. 72). Then press DISPLAY on your camcorder. To turn off the screen indicators, press DISPLAY on your camcorder again.





## Using the wide mode

You can record a cinema-like picture (CINEMA) or a 16:9 wide picture to watch on the 16:9 wide-screen TV (16:9FULL). Refer to the operating instructions of your TV.

**CINEMA**
Black bands appear on the screen during recording in the CINEMA mode **[a]**, playing back on a normal TV **[b]** or a wide-screen TV **[c]**. If you set the screen mode of the wide-screen TV to the zoom mode, a picture without black bands appears **[d]**.

**16:9FULL**
The picture during recording in the 16:9FULL mode **[e]**, or playing back on a normal TV **[f]** or a wide-screen TV **[g]** is horizontally compressed. If you set the screen mode of the wide-screen TV to the full mode, you can watch correctly proportioned images in wide-screen format **[h]**.

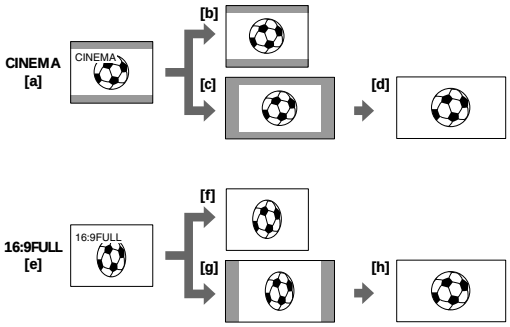






### Using the wide mode

In CAMERA mode, set 16:9WIDE to CINEMA or 16:9FULL in [CAM] in the menu settings (p. 68).

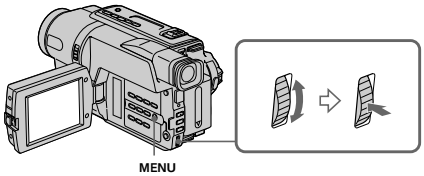


### To cancel the wide mode
Set 16:9WIDE to OFF in the menu settings.

**If the wide mode is set to 16:9FULL (CCD-TRV308/TRV408/TRV608 only)**
The SteadyShot function does not work. If you select 16:9FULL in the menu settings when the SteadyShot function is working, ☛ flashes and the SteadyShot function does not function.

**In the wide mode**
You cannot select the bounce function with FADER.

**Date or time indicator**
When you record in the 16:9FULL mode, the date or time indicator will be widened on wide-screen TVs.

**During recording**
You cannot select or cancel the wide mode. When you cancel the wide mode, set your camcorder to the standby mode and then set 16:9WIDE to OFF in the menu settings.



## Using the fader function

You can fade in or out to give your recording a professional appearance.

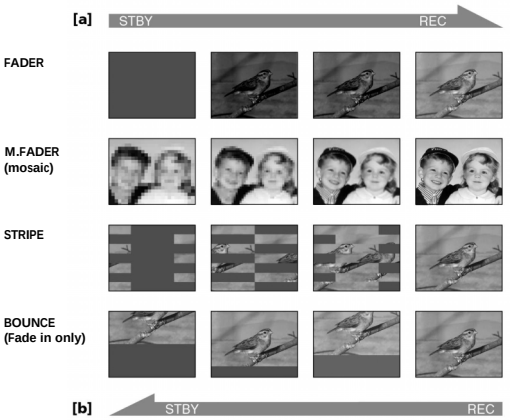


**MONOTONE**
When fading in, the picture gradually changes from black-and-white to color.
When fading out, the picture gradually changes from color to black-and-white.

### Using the fader function

**(1) When fading in [a]**
In the standby mode, press FADER until the desired fader indicator flashes.
**When fading out [b]**
In the recording mode, press FADER until the desired fader indicator flashes.
The indicator changes as follows:

→ FADER → M.FADER → STRIPE → BOUNCE*
no indicator ← MONOTONE ←

The last selected fader mode is indicated first of all.

* Fade in only

**(2)** Press START/STOP. The fader indicator stops flashing.
After the fade in/out is carried out, your camcorder automatically returns to the normal mode.

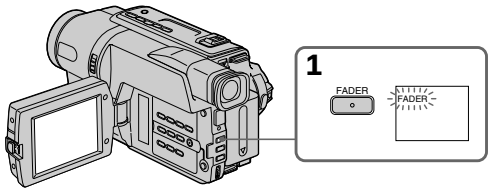


**To cancel the fader function**
Before pressing START/STOP, press FADER until the indicator disappears.

**The date, time indicator and title do not fade in or fade out**
Erase them before operating the fader function if they are not needed.

**While using the bounce function, you cannot use the following functions:**
– Focus
– Zoom
– Picture effect

**Note on the bounce function**
The BOUNCE indicator does not appear in the following mode or functions:
– D ZOOM is activated in the menu settings
– Wide mode
– Picture effect
– PROGRAM AE



## Using special effects – Picture effect

You can digitally process images to obtain special effects like those in films or on the TV.

**PASTEL [a]** : The contrast of the picture is emphasized, and the picture looks like an animated cartoon.
**NEG.ART [b]** : The color and brightness of the picture are reversed.
**SEPIA** : The picture is sepia.
**B&W** : The picture is monochrome (black-and-white).
**SOLARIZE [c]** : The light intensity is clearer, and the picture looks like an illustration.
**MOSAIC [d]** : The picture is mosaic.
**SLIM [e]** : The picture expands vertically.
**STRETCH [f]** : The picture expands horizontally.

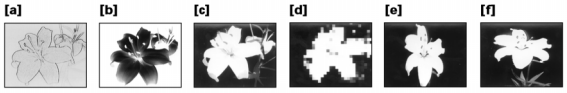


**(1)** In CAMERA mode, select P EFFECT in in the menu settings (p. 68).
**(2)** Select the desired picture effect mode in the menu settings, then press the SEL/PUSH EXEC dial.

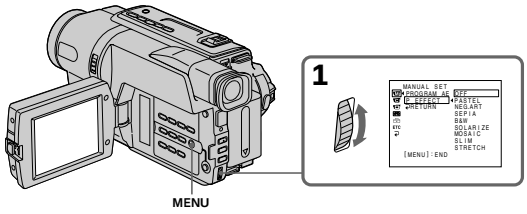


**To cancel the picture effect function**
Set P EFFECT to OFF in the menu settings.

**When you set the POWER switch to OFF (CHG)**
Your camcorder automatically returns to the normal mode.





## Using the PROGRAM AE function

You can select the PROGRAM AE (Auto Exposure) mode to suit your specific shooting requirements.

**SPOTLIGHT (Spotlight)**
This mode prevents people's faces, for example, from appearing excessively white when shooting subjects lit by strong light in the theater.

**PORTRAIT (Soft portrait)**
This mode brings out the subject while creating a soft background for subjects such as people or flowers.

**SPORTS (Sports lesson)**
This mode minimizes shake on fast-moving subjects such as in tennis or golf.

**BEACH&SKI (Beach & ski)**
This mode prevents people's faces from appearing dark in strong light or reflected light, such as at a beach in midsummer or on a ski slope.

**SUNSETMOON (Sunset & moon)**
This mode allows you to maintain atmosphere when you are recording sunsets, general night views, fireworks displays and neon signs.

**LANDSCAPE (Landscape)**
This mode is for when you are recording distant subjects such as mountains and prevents your camcorder from focusing on glass or metal mesh in windows when you are recording a subject behind glass or a screen.

### Using the PROGRAM AE function

**(1)** In CAMERA mode, select PROGRAM AE in in the menu settings (p. 68).
**(2)** Select the desired PROGRAM AE mode in the menu settings, then press the SEL/PUSH EXEC dial.

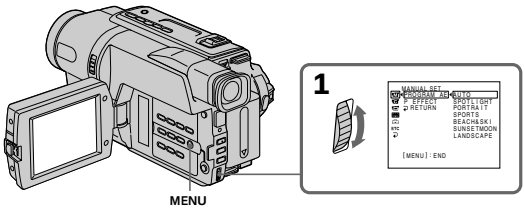


**To cancel the PROGRAM AE function**
Set PROGRAM AE to AUTO in the menu settings.

**Notes**
- In the spotlight, sports lesson and beach & ski modes, you cannot take close-ups. This is because your camcorder is set to focus only on subjects in the middle to far distance.
- In the sunset & moon and landscape modes, your camcorder is set to focus only on distant subjects.
- While using the PROGRAM AE function, you cannot select the bounce function with FADER.
- While setting NIGHTSHOT to ON, the PROGRAM AE function does not work. (The indicator flashes.)

**Even if the PROGRAM AE function is selected**
You can adjust the exposure manually.

**If you are recording under a discharge tube such as a fluorescent lamp, sodium lamp or mercury lamp**
Flickering or changes in color may occur in the following modes. If this happens, turn the PROGRAM AE function off:
– Soft portrait mode
– Sports lesson mode

## Adjusting the exposure manually

You can manually adjust and set the exposure.
Adjust the exposure manually in the following cases:
– The subject is backlit
– Bright subject and dark background
– To record dark pictures (e.g. night scenes) faithfully

**(1)** In CAMERA mode, press EXPOSURE.
The exposure indicator appears on the screen.
**(2)** Turn the SEL / PUSH EXEC dial to adjust the brightness.

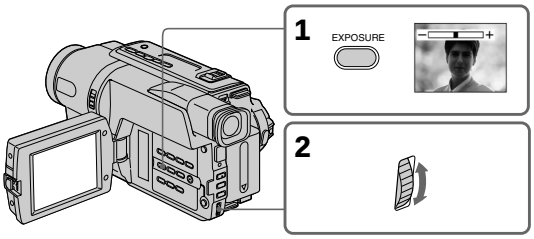


### To return to the automatic exposure mode
Press EXPOSURE.

**Note**
When you adjust the exposure manually, the backlight function does not work in CAMERA mode.

**Your camcorder automatically returns to the automatic exposure mode:**
– if you change the PROGRAM AE mode
– if you slide NIGHTSHOT to ON



## Focusing manually

You can gain better results by manually adjusting the focus in the following cases:
• The autofocus mode is not effective when shooting:
– subjects through glass coated with water droplets.
– horizontal stripes.
– subjects with little contrast with backgrounds such as walls and sky.
• When you want to change the focus from a subject in the foreground to a subject in the background.
• Shooting a stationary subject when using a tripod.

**(1)** In CAMERA mode, press FOCUS. The indicator appears on the screen.
**(2)** Turn the SEL / PUSH EXEC dial to sharpen focus.

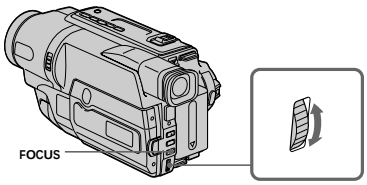


### To return to the autofocus mode
Press FOCUS.

**To focus precisely**
Adjust the zoom by first focusing at the "T" (telephoto) position and then shooting at the "W" (wide-angle) position. This makes focusing easier.

**When you shoot close to the subject**
Focus at the end of the "W" (wide-angle) position.

**changes to the following indicators:**
when recording a distant subject.
when the subject is too close to focus on.





## Superimposing a title

You can select one of eight preset titles and two custom titles (p. 44). You can also select the language, color, size, and position of titles.

**(1)** In CAMERA mode, press TITLE to display the title menu.
**(2)** Turn the SEL / PUSH EXEC dial to select , and then press the dial.
**(3)** Select the desired title in the menu settings, then press the SEL / PUSH EXEC dial. The titles are displayed in the language you selected.
**(4)** Change the color, size, or position, if necessary.
① Turn the SEL / PUSH EXEC dial to select the color, size, or position, then press the dial. The item appears.
② Turn the SEL / PUSH EXEC dial to select the desired item, then press the dial.
③ Repeat steps ① and ② until the title is laid out as desired.
**(5)** Press the SEL / PUSH EXEC dial again to complete the setting.
**(6)** Press START / STOP to start recording.
**(7)** When you want to stop recording the title, press TITLE.

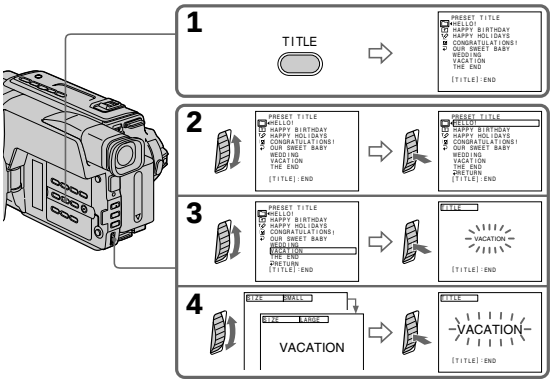




## Superimposing a title

### To superimpose the title while you are recording
Press TITLE while you are recording, and carry out steps 2 to 5. When you press the SEL / PUSH EXEC dial at step 5, the title is superimposed.

### To select the language of a preset title
If you want to change the language, select before step 2. Then select the desired language and return to step 2.

**Note**
Both the date and time or either of them may not be displayed depending on the size or position of the title.

**If you display the menu or title menu while superimposing a title**
The title is not recorded while the menu or title menu is displayed.

**To use the custom title**
If you want to use the custom title, select in step 2.

**Title setting**
• The title color changes as follows:
WHITE ⟷ YELLOW ⟷ VIOLET ⟷ RED ⟷ CYAN ⟷ GREEN ⟷ BLUE
• The title size changes as follows:
SMALL ⟷ LARGE
You cannot input 13 characters or more in LARGE size. If you input more than 12 characters, the title size returns to SMALL even if you select LARGE.
• The title position changes as follows:
1⟷ 2⟷ 3⟷ 4⟷ 5⟷ 6⟷ 7⟷ 8⟷ 9
The larger the position number, the lower the title is positioned.
When you select the title size "LARGE," you cannot choose position 9.
When you select the title size "LARGE" in the CINEMA mode, you cannot choose position 8 nor 9.

**When you are selecting and setting the title**
You cannot record the title displayed on the screen.

**When you superimpose a title while you are recording**
The beep does not sound.

**While you are playing back**
You can superimpose a title. However, the title is not recorded on tape.
You can record a title when you dub a tape connecting your camcorder to the VCR with the A / V connecting cable.

## Making your own titles

You can make up to two titles and store them in your camcorder. Each title can have up to 20 characters.

**(1)** In CAMERA or PLAYER mode, press TITLE.
**(2)** Turn the SEL / PUSH EXEC dial to select ✎, then press the dial.
**(3)** Turn the SEL / PUSH EXEC dial to select the first line (CUSTOM1 SET) or the second line (CUSTOM2 SET), then press the dial.
**(4)** Turn the SEL / PUSH EXEC dial to select the column of the desired character, then press the dial.
**(5)** Turn the SEL / PUSH EXEC dial to select the desired character, then press the dial.
**(6)** Repeat steps 4 and 5 until you have selected all characters and completed the title.
**(7)** To finish making your own titles, turn the SEL / PUSH EXEC dial to select [SET], then press the dial. The title is stored in memory.
**(8)** Press TITLE to make the title menu disappear.

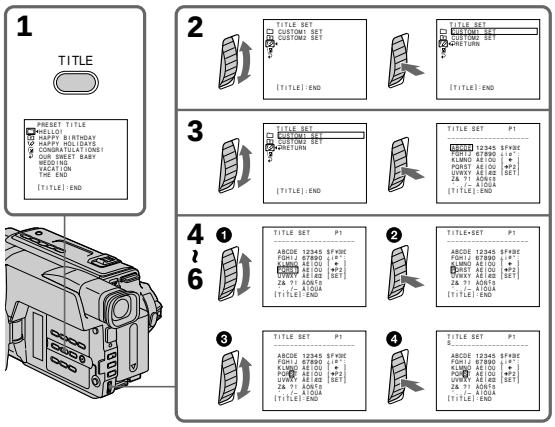




### Making your own titles

#### To change a title you have stored

In step 3, select CUSTOM1 SET or CUSTOM2 SET, depending on which title you want to change, then press the SEL / PUSH EXEC dial. Turn the SEL / PUSH EXEC dial to select [←], then press the dial to delete the title. The last character is erased. Enter the new title as desired.

**If you take 5 minutes or longer to enter characters in the standby mode while a cassette is in your camcorder**

The power automatically turns off. The characters you have entered remain stored in memory. Set the POWER switch to OFF (CHG) once, and turn it to CAMERA again, then proceed from step 1.
We recommend setting the POWER switch to PLAYER or removing the cassette so that your camcorder does not automatically turn off while you are entering title characters.

**If you select [→P2]**

The menu for selecting alphabet and Russian characters appears. Select [→P1] to return to the previous screen.

**To erase a character**

Select [←]. The last character is erased.

**To enter a space**

Select [Z& ?!], then select the blank part.





## Using the built-in light

#### – CCD-TRV107/TRV308/TRV408/TRV608 only

You can use the built-in light to suit your shooting situation. The recommended distance between the subject and camcorder is about 1.5 m (5 feet).

Press LIGHT repeatedly, until the ON indicator appears on the screen while your camcorder is in CAMERA mode. The built-in light turns on.
If you turn the POWER switch to OFF (CHG), the built-in light turns off simultaneously. You cannot turn the built-in light on by turning the POWER switch to CAMERA again. To turn on the built-in light again, press LIGHT again in CAMERA mode.

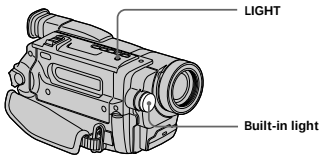


#### To turn off the built-in light

Press LIGHT repeatedly, until no indicator appears on the screen.

#### To turn on the built-in light automatically

Press LIGHT repeatedly, until the AUTO indicator appears on the screen.
The built-in light automatically turns on and off according to the ambient brightness.

**CAUTION**

**Be careful not to touch the lighting section, because the plastic window and surrounding surfaces are hot while the light is on. It remains hot for a while after the light is turned off.**

**DANGER**

**Not to be handled by children.**
**Emits intense heat and light.**
**Use with caution to reduce the risk of fire or injury to persons.**
**Do not directly aim the light at persons or materials from less than 1.22 m (4 feet) during use and until cool.**
**Turn the built-in light off when not in use.**

**When you press LIGHT**

The indicator changes as follows:

→ AUTO → ON → no indicator



### Using the built-in light

**Notes**

- The built-in light turns off automatically in the following cases:
  – When it stays on in the AUTO mode (AUTO) for more than 5 minutes.
  – When you leave it on for more than 5 minutes with no cassette inserted or after the tape has run out.
  To turn the built-in light on again, press LIGHT again.
- The battery pack discharges quickly while the built-in light is turned on. Turn it off when not in use.
- When you do not use your camcorder, turn the built-in light off and remove the battery pack to avoid turning on the built-in light accidentally.
- When flickering occurs while shooting in the AUTO mode (AUTO), press LIGHT until the ON indicator appears.
- The built-in light may turn on / off when you use the PROGRAM AE or backlight function while shooting in the AUTO mode (AUTO).
- The built-in light may turn off when inserting or ejecting a cassette.
- While the end search function is working, the built-in light is turned off.
- When you use the conversion lens (optional), the built-in light is blocked and may not illuminate the subject properly.

### Replacing the bulb

Use the Sony XB-3D halogen lamp (optional). The supplied halogen lamp is not commercially available. Purchase the Sony XB-3D halogen lamp.
Remove the power source before replacing the bulb.

**(1)** Remove the built-in light unit while pushing the hole under the built-in light unit using a wire.
**(2)** Turn the bulb housing counterclockwise and detach from the built-in light unit.
**(3)** Replace the bulb using a dry cloth.
**(4)** Attach the bulb housing by turning it clockwise, then replace the built-in light unit.

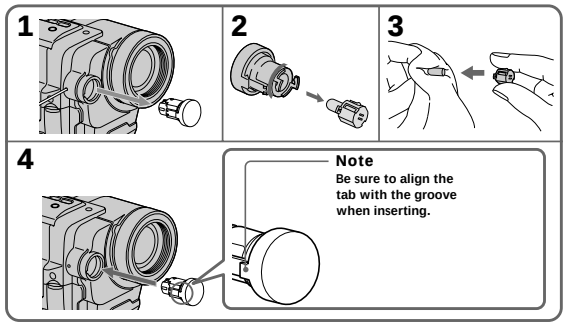

## Using the built-in light

**CAUTION**

- When replacing the bulb, use only the Sony XB-3D halogen lamp (optional) to reduce the risk of fire.
- To prevent possible burn hazard, disconnect the power source before replacing and do not touch the bulb until the bulb becomes cool enough to handle (for about 30 minutes or more).

**Note**
To prevent the bulb from being smudged with finger prints, handle it with a dry cloth, etc. If the bulb is smudged, wipe it completely.





# Dubbing a tape

### Using the A/V connecting cable

Connect your camcorder to the VCR using the A/V connecting cable supplied with your camcorder.
You can record and edit a picture with the connected VCR by using your camcorder as a player.
Set DISPLAY to LCD in ETC in the menu settings (The default setting is set to LCD.)
If you do not make the indicators disappear, they are recorded on tapes.

**Make the indicators disappear by pressing the following buttons:**
– DISPLAY on your camcorder
– DISPLAY on the Remote Commander (CCD-TRV107/TRV408 only)

**(1)** Insert a blank tape (or a tape you want to record over) into the VCR, and insert the recorded tape into your camcorder.
**(2)** Set the input selector on the VCR to LINE. Refer to the operating instructions of your VCR for more information.
**(3)** Set the POWER switch to PLAYER.
**(4)** Play back the recorded tape on your camcorder.
**(5)** Start recording on the VCR.
Refer to the operating instructions of your VCR for more information.

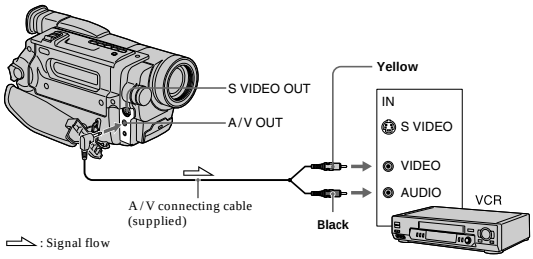






## Dubbing a tape

### When you have finished dubbing a tape

Press ■ on both your camcorder and the VCR.

### To prevent deterioration of pictures when dubbing

Set EDIT to ON in the menu settings before dubbing.

**You can edit on VCRs that support the following systems:**
8 mm 8, Hi8 Hi8, Digital 8 D8, VHS VHS, S-VHS S-VHS, VHSC VHS-C, S-VHSC S-VHS-C, Betamax β, ED Betamax ED Beta, mini DV MiniDV, or DV DV

**If your VCR is a stereo type**
Connect the audio plug of the A/V connecting cable supplied to the left (white) input jack of your VCR.

**If your VCR has an S video jack**
Connect using an S video cable (optional) to obtain optimum quality screen images.
With this connection, you do not need to connect the yellow (video) plug of the A/V connecting cable.
Connect an S video cable (optional) to the S video jacks of both your camcorder and the VCR.



# Dubbing a tape easily – Easy Dubbing

VCR operation for dubbing can be controlled easily by using your camcorder when the VCR is connected.
You can select one of eight preset titles and two custom titles stored in your camcorder as instructed in "Making your own titles" (p. 44). Select the desired color, size, and background color of titles.

### Using the Easy Dubbing function

**Step 1** Connecting the VCR (p. 51).
**Step 2** Setting the VCR to operate with your camcorder (p. 52 to 55).
**Step 3** Selecting the title (p. 56).
**Step 4** Selecting the dubbing mode (p. 57).
**Step 5** Performing Easy Dubbing (p. 58).

If you dub using the same VCR again, you can skip step 2.
If you do not need to put in a title, you can skip step 3.

### Step 1: Connecting the VCR

Connect the devices as illustrated in page 49.

**You can edit on VCRs that support the following systems:**
8 mm 8, Hi8 Hi8, Digital 8 D8, VHS VHS, S-VHS S-VHS, VHSC VHS-C, S-VHSC S-VHS-C, Betamax β, ED Betamax ED Beta, mini DV MiniDV, or DV DV

**If your VCR has an S video jack**
Connect using an S video cable (optional) to obtain optimum quality screen images.
With this connection, you do not need to connect the yellow (video) plug of the A/V connecting cable.
Connect an S video cable (optional) to the S video jacks of both your camcorder and the VCR.

## Dubbing a tape easily – Easy Dubbing

### Step 2: Setting the VCR to operate with your camcorder

You can control the VCR by wireless remote control.

**(1) Setting the modes to cancel recording pause on the VCR**

① Set the POWER switch to PLAYER on your camcorder.
② Turn the power of the connected VCR on, then set the input selector to LINE.
When you connect a video camera recorder, set its power switch to VTR / VCR.
③ Press EASY DUBBING to display the menu.
④ Turn the SEL / PUSH EXEC dial to select SETUP, then press the dial.
⑤ Turn the SEL / PUSH EXEC dial to select PAUSE MODE, then press the dial.
⑥ Turn the SEL / PUSH EXEC dial to select the mode to cancel recording pause on the VCR, then press the dial.

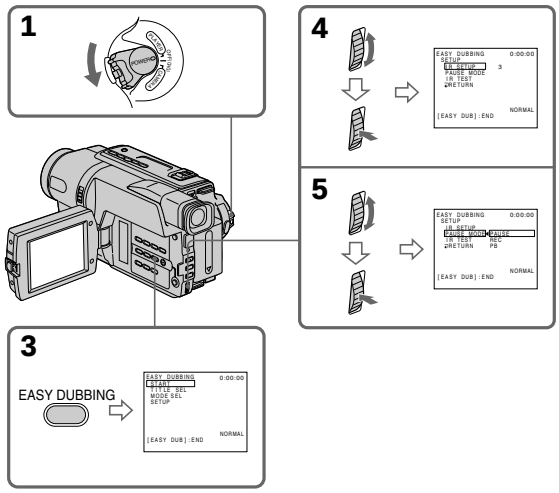


**Buttons for canceling recording pause on the VCR**
The buttons vary depending on your VCR. To cancel recording pause:
– Select PAUSE if the button to cancel recording pause is ❚❚.
– Select REC if the button to cancel recording pause is ●.
– Select PB if the button to cancel recording pause is ►.



## Dubbing a tape easily – Easy Dubbing

**(2) Setting the IR SETUP code**

① Turn the SEL / PUSH EXEC dial to select IR SETUP, then press the dial.
② Turn the SEL / PUSH EXEC dial to select the IR SETUP code of your VCR, then press the dial.
Check the code in "About the IR SETUP code" (p. 54).

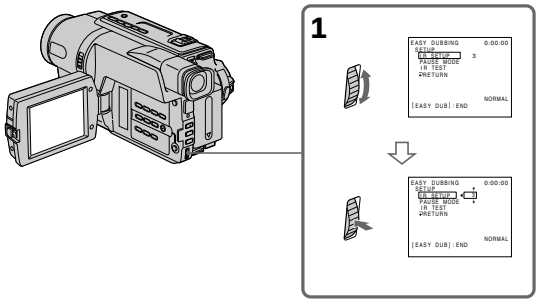


Editing



## Dubbing a tape easily – Easy Dubbing

**About the IR SETUP code**
The IR SETUP code is stored in the memory of your camcorder. Be sure to set the correct code depending on your VCR. The default setting is Code number 3.

| Brand | IR SETUP code |
|---|---|
| Sony | 1, 2, 3, 4, 5, 6 |
| Admiral (M. Wards) | 89 |
| Aiwa | 80, 47, 54 |
| Akai | 49, 51 |
| Audio Dynamic | 21, 35 |
| Bell&Howell (M. Wards) | 36 |
| Brocsonic | 70, 82, 21 |
| Canon | 77, 78 |
| Citizen | 47 |
| Craig | 73, 47 |
| Curtis Mathis | 8, 80, 77 |
| Daewoo | 26, 40, 77 |
| DBX | 21, 33, 35 |
| Dimensia | 8 |
| Emerson | 26, 82, 59, 48, 70, 81, 80 |
| Fisher | 36, 45, 37, 44 |
| Funai | 80 |
| General Electric | 8, 77, 32*, 94*, 101 |
| Goldstar / LG | 47 |
| GO VIDEO | 71 |
| Hitachi | 78, 8, 42 |
| HQ | 40 |
| Instant Replay | 77, 78 |
| JC Penny | 77, 42, 8, 36, 21, 33, 35 |
| JVC | 21, 12, 13, 14, 33, 35 |
| Kenwood | 21, 33, 47, 35 |
| LXI (Sears) | 80, 47, 42, 44, 45, 36, 37, 49 |
| Magnavox | 83, 78, 77, 17 |
| Marantz | 21, 33, 35 |
| Marta | 47 |
| Memorex | 77, 37 |
| Minolta | 42, 8 |

| Brand | IR SETUP code |
|---|---|
| Mitsubishi / MGA | 28, 22, 23, 24, 29 |
| Multitech | 23, 80, 32 |
| NEC | 21, 33, 35 |
| Olympic | 77, 78 |
| Optimus | 22 |
| Orion | 60 |
| Panasonic | 16, 17, 78, 77 |
| Pentax | 42, 8 |
| Philco | 78, 77, 26, 70 |
| Philips | 47, 83, 78, 77 |
| Pioneer | 78 |
| Quasar | 78, 77, 16, 17, 6 |
| RCA / PROSCAN | 8, 42, 16, 77, 83, 7, 40, 41, 78, 78*, 101 |
| Realistic | 77, 36, 88, 37, 22, 80 |
| Sansui | 21 |
| Singer | 73 |
| Samsung | 94, 41, 32, 24, 32*, 94*, 24* |
| Sanyo | 36, 37, 26, 36, 47 |
| Scott | 40, 41, 32, 37, 28, 22, 23, 24 |
| Sharp | 89, 88 |
| Shintom | 73 |
| Signature 2000 (M. Wards) | 80, 89 |
| Sylvania | 83, 78, 77, 80 |
| Symphonic | 80 |
| Tashiro | 47 |
| Tatung | 21, 33, 35 |
| Teac | 21, 33, 80, 35 |
| Technics | 77, 78 |
| Toshiba | 40, 7, 49 |
| Wards | 89, 88, 37, 95, 47 |
| Yamaha | 36, 21, 33, 35 |
| Zenith | 95 |

* TV / VCR component

**Note on IR SETUP code**
The Easy Dubbing is not possible if the VCR does not support IR SETUP codes.



## Dubbing a tape easily – Easy Dubbing

**(3) Setting your camcorder and the VCR to face each other**

Locate the Infrared rays emitter of your camcorder and face it towards the remote sensor of the VCR.
Set the devices about 30 cm (12 in.) apart, and remove any obstacles between the devices.

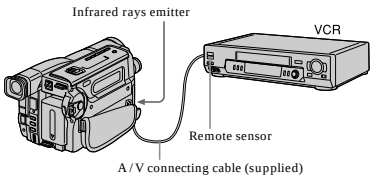


**(4) Confirming the VCR operation**

① Insert a recordable tape into the VCR, then set to recording pause.
② Turn the SEL / PUSH EXEC dial to select IR TEST, then press the dial.
③ Turn the SEL / PUSH EXEC dial to select EXECUTE, then press the dial.
If the VCR starts recording, the setting is correct.
When finished, the indicator changes to COMPLETE.

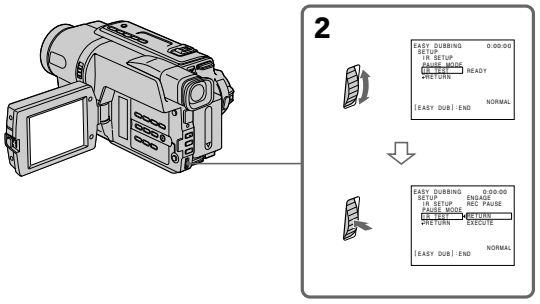


**When the VCR does not operate correctly**
• After checking the code in "About the IR SETUP code," set IR SETUP or PAUSE MODE again.
• Place your camcorder at least 30 cm (12 in.) away from the VCR.
• Refer to the operating instructions of your VCR.

Editing

## Dubbing a tape easily – Easy Dubbing

### Step 3: Selecting the title

You can select title, color, size, and background color.
CUSTOM1 and CUSTOM2 are custom titles stored in your camcorder as instructed in "Making your own titles" (p. 44).

**(1)** Press EASY DUBBING to display the menu.
**(2)** Turn the SEL / PUSH EXEC dial to select TITLE SEL, then press the dial.
**(3)** Select the desired title in the menu settings, then press the dial. The title is displayed.
**(4)** Change the color, size, or background color, if necessary.
① Turn the SEL / PUSH EXEC dial to select the color, size, or background color, then press the dial. The item appears.
② Turn the SEL / PUSH EXEC dial to select the desired item, then press the dial.
③ Repeat steps ① and ② until the title is laid out as desired.
④ Press the SEL / PUSH EXEC dial again to complete the setting.

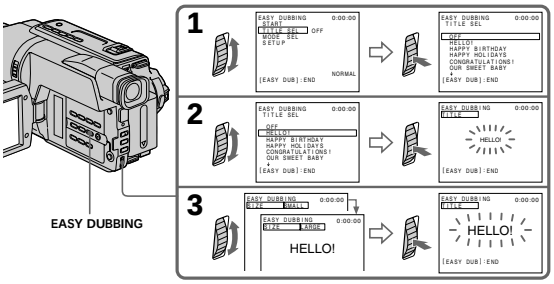


**Note**
You can put a title only into the tape of the VCR.

**Title setting**
• The title color changes as follows:
WHITE ⟷ YELLOW ⟷ VIOLET ⟷ RED ⟷ CYAN ⟷ GREEN ⟷ BLUE
• The title size changes as follows:
SMALL ⟷ LARGE
• The background color changes as follows:
FADE ⟷ WHITE ⟷ YELLOW ⟷ VIOLET ⟷ RED ⟷ CYAN ⟷ GREEN ⟷ BLUE ⟷ BLACK



## Dubbing a tape easily – Easy Dubbing

### Step 4: Selecting the dubbing mode

You can choose either normal recording (NORMAL) or interval recording (PREVIEW).
**(1)** Turn the SEL / PUSH EXEC dial to select MODE SEL, then press the dial.
**(2)** Turn the SEL / PUSH EXEC dial to select the mode to dub, then press the dial.
– NORMAL: you can record into the VCR normally.
– PREVIEW: you can make a time-lapse dubbing by setting the camcorder to automatically playback and standby sequentially.

**[a]**: Recording (VCR)
**[b]**: Waiting time (VCR)
**[c]**: Playback time (camcorder)

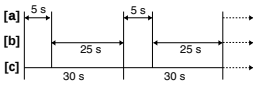


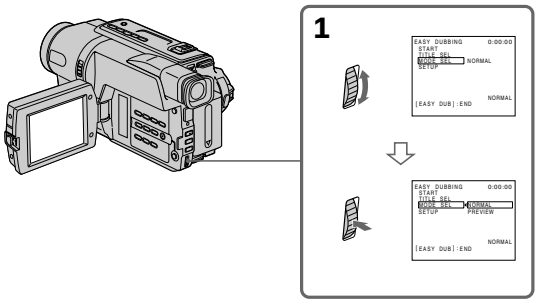






## Dubbing a tape easily – Easy Dubbing

### Step 5: Performing Easy Dubbing

Make sure that your camcorder and VCR are connected, and that the VCR is set to recording pause.
When you use a video camera recorder, set its POWER switch to VTR / VCR. Set the POWER switch of your camcorder to PLAYER.
**(1)** Turn the SEL / PUSH EXEC dial to select START, then press the dial.
**(2)** Turn the SEL / PUSH EXEC dial to select EXECUTE, then press the dial.
When dubbing ends, your camcorder and VCR stop automatically.

**To stop dubbing during editing**
Press ■ on your camcorder.

**To quit the Easy Dubbing function**
Your camcorder stops when dubbing is complete. Then the display returns to START in the menu settings.
Press EASY DUBBING to quit the Easy Dubbing function.

**You cannot record on the VCR when:**
– The tape has run out.
– The write-protect tab is set to expose the red mark.
– The IR SETUP code is not correct.
– The button used to cancel recording pause is not correct.

**NOT READY appears on the screen when:**
START is not carried out.



— PC Connection —

# Viewing images using your computer – USB Streaming (Windows users only)

### – CCD-TRV608 only

If you connect your camcorder and computer by the supplied USB cable, you can view images live from your camcorder and images recorded on a tape on your computer. Furthermore, if you caputure images live from your camcorder and images recorded on a tape to your computer, you can process or edit it by computer software and append it to e-mail.

### Using the USB Streaming function

• Installing the USB driver (p. 60 to 63).
• Installing "PIXELA ImageMixer Ver.1.0 for Sony" (p. 63).
• Capturing images with "PIXELA ImageMixer Ver.1.0 for Sony" (p. 63 to 66).

### Recommended computer environment

**OS:**
Microsoft Windows 98 SE, Windows Me, Windows 2000 Professional, Windows XP Home Edition or Windows XP Professional (standard installation)
However, operation is not assured if the above environment is an upgraded OS.
If you are using Windows 98, you cannot capture sounds.
**CPU:**
Minimum 500 MHz Intel Pentium III or faster (800 MHz or faster recommended)
**Application:**
DirectX 8.0a or later
**Sound system:**
16 bit stereo sound card and speakers
**Memory:**
64 MB or more
**Hard disk:**
Minimum 200 MB available hard disk space for installation
1 GB hard disk space or more recommended for working area (depending on the file size of editing the images)
**Display:**
4 MB VRAM video card, Minimum 800 × 600 dot High color (16 bit color, 65 000 colors), Direct Draw display driver capability (At 800 × 600 dot or less, 256 colors and less, this product will not operate correctly.)
**Others:**
This product is compatible with DirectX technology, so it is necessary to install DirectX.

The USB connector is provided as standard.

**This function is not available on Macintosh.**

## Viewing images using your computer – USB Streaming (Windows users only)

**Notes**
- Operations are not guaranteed if you connect 2 or more pieces of USB equipment to a single computer at the same time or when using a hub.
- Depending on the type of USB equipment used simultaneously, some equipment may not operate.
- Operations are not guaranteed for all the recommended computer environments mentioned above.

---

- Microsoft and Windows are registered trademarks of Microsoft Corporation in the United States and / or other countries.
- Pentium is either registered trademark or trademark of Intel Corporation.
- All other product names mentioned herein may be the trademarks or registered trademarks of their respective companies.
- Furthermore, "™" or "®" are not mentioned in this manual.

### Installing the USB driver

Before connecting your camcorder to your computer, install the USB driver to the computer. The USB driver is contained together with application software for viewing images on the CD-ROM supplied with your camcorder.

**Be sure to follow the steps before connecting the USB cable to your computer. Connect the USB cable in step 8.**

**If the USB driver has been registered incorrectly because your computer was connected to your camcorder before installing the USB driver, reinstall the USB driver following the procedure on page 61.**

**For Windows 98 SE, Windows Me, Windows 2000 Professional and Windows XP users**
Log in with permission of Administrator. (for Windows 2000 Professional and Windows XP users)
**(1)** Turn on your computer and allow Windows to load.
**(2)** Insert the supplied CD-ROM into the CD-ROM drive of your computer. The application software screen appears.
**(3)** Move the cursor to "USB Driver" and click. The USB driver installation starts.

## Viewing images using your computer – USB Streaming (Windows users only)

**(4)** Follow the on-screen messages to install the USB driver.
**(5)** Connect the AC power adaptor to your camcorder and then to a wall outlet.
**(6)** Set the POWER switch to CAMERA or PLAYER.
**(7)** Select USB STREAM to ON in in the menu settings (p. 71).
**(8)** With the CD-ROM inserted, connect the USB jack on your camcorder to the USB connector on your computer using the supplied USB cable.
Your computer recognises the camcorder, and the Windows Add Hardware Wizard starts.

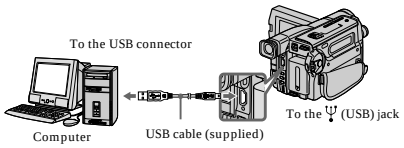


**(9)** Follow the on-screen messages so that the Add Hardware Wizard recognizes that the USB drivers have been installed. The Add Hardware Wizard starts three times because three different USB drivers are installed. Be sure to allow the installation to complete without interrupting it.

**If the "Files Needed" screen appears (Windows 2000 Professional and Windows XP users)**
Set the CD-ROM on the CD-ROM driver then select "Browse...." → "My Computer" → "ImageMixer" → "sonyhcb.sys", and click the "OK" button.

The installation is completed, procede to Installing "PIXELA ImageMixer Ver.1.0 for Sony" on page 63.

### If you cannot install the USB driver

The USB driver has been registered incorrectly as your computer was connected to your camcorder before installing the USB driver. Perform the following procedure to correctly install the USB driver.

**Step 1 Uninstall the incorrect USB driver**
① Turn on your computer and allow Windows to load.
② Connect the USB jack on your camcorder to the USB connector on your computer using the supplied USB cable.

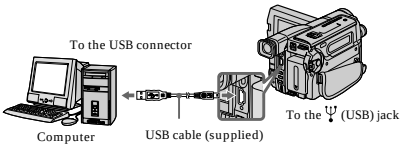


PC Connection



## Viewing images using your computer – USB Streaming (Windows users only)

③ Connect the AC power adaptor, and set the POWER switch to CAMERA or PLAYER.
④ Open your computer's "Device Manager."
Windows XP:
Select "Start" → "Control Panel" → "System" → "Hardware" tab, and click the "Device Manager" button.
If "System" is not in the control panel, the "Pick a Category" screen appears. In this case, click "Switch to Classic View" instead.
Windows 2000 Professional:
Select "My Computer" → "Control Panel" → "System" → "Hardware" tab, and click the "Device Manager" button.
Windows 98 SE / Windows Me:
Select "My Computer" → "Control Panel" → "System," and click the "Device Manager" tab.
⑤ Select the devices underlined in the illustrations below, and delete them.

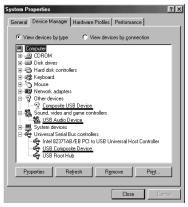
Windows 98 SE

Windows Me

Windows 2000 Professional

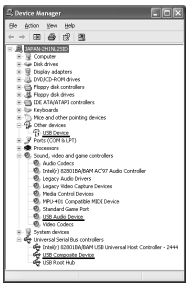
Windows XP



## Viewing images using your computer – USB Streaming (Windows users only)

⑥ Set the POWER switch to OFF (CHG), and then disconnect the USB cable.
⑦ Reboot your computer.

**Step 2 Install the USB driver**
Perform the entire procedure listed in "Installing the USB driver" on the page 60.

### Installing "PIXELA ImageMixer Ver.1.0 for Sony"

Install "PIXELA ImageMixer Ver.1.0 for Sony" to your computer. "PIXELA ImageMixer Ver.1.0 for Sony" is contained on the CD-ROM supplied with your camcorder. You can view video images easily on your camcorder, using your computer with "PIXELA ImageMixer Ver.1.0 for Sony".

**For Windows 2000 Professional users**
Log in with permission of Power Users or Adminisitrator.
**For Windows XP users**
Log in with permission of Administrator.
**(1)** Turn on your computer and allow Windows to load.
While using your computer, close all running applications.
**(2)** Insert the supplied CD-ROM into the CD-ROM drive of your computer.
The application software screen appears.
If the application software screen does not appear, double-click "My Computer" and then "ImageMixer" (CD-ROM Drive). The application software screen appears after a while.

**(3)** Move the cursor to "PIXELA ImageMixer" and click.
The language selection dialogue box appears.
**(4)** Select the language for installation.
**(5)** Follow the on-screen messages.

Follow the directions on the screen to install DirectX. DirectX 8.0 will be installed.

### Capturing images with "PIXELA ImageMixer Ver.1.0 for Sony"

**For Windows 2000 Professional users**
Log in with permission of Power Users or Adminisitrator.
**For Windows XP users**
Log in with permission of Administrator.

PC Connection

## Viewing images using your computer – USB Streaming (Windows users only)

### Viewing images

**Viewing images recorded on a tape**

**(1)** Turn on your computer and allow Windows to load.
**(2)** Connect one end of the USB cable to the USB jack on the camcorder and the other end to the USB connector on your computer using the supplied USB cable.

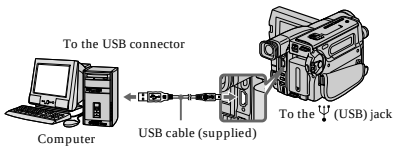


**(3)** Connect the AC power adaptor and insert a cassette to your camcorder.
**(4)** Set the POWER switch to PLAYER.
**(5)** Select USB STREAM to ON in in the menu settings (p. 71).
**(6)** Select "Start" → "Program" → "Pixela" → "ImageMixer" → "PIXELA ImageMixer Ver.1.0 for Sony" on Windows.
**(7)** Click the input mode button in the left side of Start-up screen.

**(8)** Select .

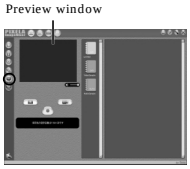


**(9)** Start playing back a tape on your camcorder. The images recorded on a tape appears in the preview window.



## Viewing images using your computer – USB Streaming (Windows users only)

**Viewing images live from your camcorder**

**(1)** Follow the procedure **(1)** - **(2)** on page 64, and then connect the AC power adaptor to your camcorder and then to a wall outlet.
**(2)** Set the POWER switch to CAMERA.
**(3)** Follow the procedure **(5)** - **(8)** on page 64.
The images live from your camcorder appears in the preview window.

### Capturing images

**Capturing still images**

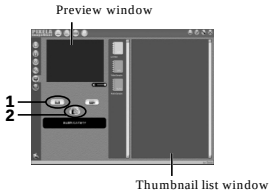


**(1)** Select .
**(2)** Click at the point to capture using the preview window. The captured image appears on the thumbnail list window.

**Capturing moving images**

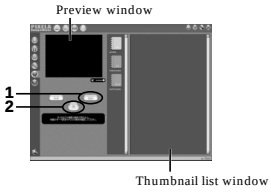


**(1)** Select .
**(2)** Click at the start point to capture and click at the stop point to capture using the preview window. The captured image appears on the thumbnail list window.





## Viewing images using your computer – USB Streaming (Windows users only)

**Notes**

- When you view the image using your computer with USB connection, the image may fluctuate.
- When your camcorder is in the standby mode with a cassette inserted, it turns off automatically after 5 minutes.
- We recommend setting DEMO MODE to OFF in the menu settings when your camcorder is in the standby mode, and no cassette is inserted.
- Indicators in the camcorder LCD screen do not appear on images that are captured into your computer.

**If image data cannot be transferred by the USB connection**

The USB driver has been registered incorrectly as your computer was connected to your camcorder before installing the USB driver. Perform the procedure to correctly install the USB driver (p. 60).

**If any trouble occurs**

Close all running applications, then restart it.

**Carry out the following operations after quitting the application:**

– disconnect the USB cable
– turn on / off the power

### Seeing the on-line help (operation manual) of "PIXELA ImageMixer Ver.1.0 for Sony"

"PIXELA ImageMixer Ver.1.0 for Sony" is provided with on-line help (operation manual).

**(1)** Click button located in the upper-right corner of the screen.
The ImageMixer's Manual screen appears.
**(2)** You can access the desired topics from the contents.

**To close the on-line help**

Click located in the upper right corner of the "ImageMixer's Manual" screen.

**If you have any questions about "PIXELA ImageMixer Ver1.0 for Sony"**

ImageMixer Ver.1.0 for Sony is a trademark of PIXELA corporation. Refer to the information web site at: "http://www.imagemixer.com".

### Notes on using your computer

**Communications with your computer**

Communications between your camcorder and your computer may not recover after recovering from Suspend, Resume, or Sleep.



— Customizing Your Camcorder —

## Changing the menu settings

To change the mode settings in the menu settings, select the menu items with the SEL / PUSH EXEC dial. The default settings can be partially changed. First, select the icon, then the menu item and then the mode.

**(1)** In CAMERA or PLAYER mode, press MENU.
**(2)** Turn the SEL / PUSH EXEC dial to select the desired icon, then press the dial to set.
**(3)** Turn the SEL / PUSH EXEC dial to select the desired item, then press the dial to set.
**(4)** Turn the SEL / PUSH EXEC dial to select the desired mode, and press the dial to set.
**(5)** If you want to change other items, select RETURN and press the dial, then repeat steps from 2 to 4.

For details, see "Selecting the mode setting of each item" (p. 68).

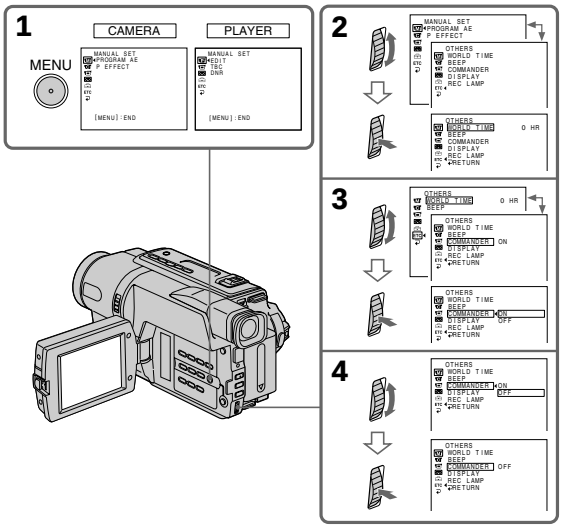


**To make the menu display disappear**

Press MENU.

## Changing the menu settings

**Menu items are displayed as the following icons:**

- MANUAL SET
- CAMERA SET
- PLAYER SET
- LCD / VF SET
- TAPE SET
- SETUP MENU
- OTHERS

**Depending on your camcorder model**
The menu display may be different from that in this illustration.

### Selecting the mode setting of each item

● is the default setting.

Menu items differ according to the position of the POWER switch.
The screen shows only the items you can operate at the moment.

| Icon/item | Mode | Meaning | POWER switch |
|---|---|---|---|
| PROGRAM AE | —— | To suit your specific shooting requirement. (p. 38) | CAMERA |
| P EFFECT | —— | To add special effects like those in films or on the TV to images. (p. 37) | CAMERA |
| D ZOOM | ● OFF | If you set to OFF, digital zoom is deactivated and up to 20× is carried out. | CAMERA |
| | 40× 560× | If you set to 40×/560×, digital zoom is activated and more than 20× to 40× / 560× is performed digitally. (p. 22) (CCD-TRV408 / TRV608 only) | |
| | ● OFF | If you set to OFF, digital zoom is deactivated and up to 20× is carried out. | |
| | 40× 460× | If you set to 40×/460×, digital zoom is activated and more than 20× to 40× / 460× is performed digitally. (p. 22) (CCD-TRV108 / TRV308 only) | |
| | ● OFF | If you set to OFF, digital zoom is deactivated and up to 20× is carried out. | |
| | 40× 450× | If you set to 40×/450×, digital zoom is activated and more than 20× to 40× / 450× is performed digitally. (p. 22) (CCD-TRV107 only) | |
| 16:9WIDE | ● OFF | — | CAMERA |
| | CINEMA | To record in the CINEMA mode. (p. 33) | |
| | 16:9FULL | To record in the 16:9FULL mode. | |
| STEADYSHOT* | ● ON | To compensate for camera-shake. | CAMERA |
| | OFF | To cancel the SteadyShot function. Natural pictures are produced when shooting a stationary object with a tripod. | |
| N.S.LIGHT | ● ON | To use the NightShot Light function. (p. 26) | CAMERA |
| | OFF | To cancel the NightShot Light function. | |



## Changing the menu settings

**Notes on the SteadyShot function***
- The SteadyShot function will not correct excessive camera-shake.
- Attachment of a conversion lens (optional) may influence the SteadyShot function.
- SteadyShot does not operate in the 16:9FULL mode. If you set STEADYSHOT to ON in the menu settings, the "" indicator flashes.

**If you cancel the SteadyShot function***
The SteadyShot off indicator appears. Your camcorder prevents excessive compensation for camera-shake.

* CCD-TRV308 / TRV408 / TRV608 only

| Icon/item | Mode | Meaning | POWER switch |
|---|---|---|---|
| EDIT | ● OFF | — | PLAYER |
| | ON | To minimize picture deterioration when editing. | |
| TBC | ● ON | To correct jitter. | PLAYER |
| | OFF | To not correct jitter. Set TBC to OFF when playing back a tape on which you have dubbed over and recorded the signal of a TV game or similar machine. | |
| TBC stands for "Time Base Corrector." | | | |
| DNR | ● ON | To reduce picture noise. | PLAYER |
| | OFF | To reduce a conspicuous afterimage when the picture has a lot of movement. | |
| DNR stands for "Digital Noise Reduction." | | | |

**In more than 5 minutes after removing the power source**
The "EDIT" item is returned to their default settings.
The other menu items are held in memory even when the battery is removed.

| Icon/item | Mode | Meaning | POWER switch |
|---|---|---|---|
| LCD BRIGHT | —— | To adjust the brightness on the LCD screen with the SEL / PUSH EXEC dial to adjust the following bar. To darken ◄► To lighten | PLAYER CAMERA |
| LCD B.L. | ● BRT NORMAL | To set the brightness on the LCD screen normal. | PLAYER CAMERA |
| | BRIGHT | To brighten the LCD screen. | |
| LCD COLOR | —— | To adjust the color on the LCD screen, turn the SEL / PUSH EXEC dial to adjust the following bar. To reduce intensity ◄► To increase intensity | PLAYER CAMERA |
| VF B.L.* | ● BRT NORMAL | To set the brightness in the viewfinder normal. | PLAYER CAMERA |
| | BRIGHT | To brighten the viewfinder. | |





## Changing the menu settings

**Notes on VF B.L.* and LCD B.L.**
- When you select BRIGHT, battery life is reduced by about 10 percent during recording.
- When you use power sources other than the battery pack, BRIGHT is automatically selected.

* CCD-TRV107 / TRV308 / TRV408 / TRV608 only

| Icon/item | Mode | Meaning | POWER switch |
|---|---|---|---|
| REC MODE | ● SP | To record in the SP (Standard Play) mode. | CAMERA |
| | LP | To increase the recording time to twice the SP mode. | |
| ORC TO SET | —— | To automatically adjust the recording condition to get the best possible recording. Press START / STOP to start adjustment. Your camcorder takes about 10 seconds to check the tape condition and then returns to the standby mode. | CAMERA |
| ORC stands for "Optimizing the Recording Condition." | | | |
| REMAIN | ● AUTO | To display the remaining tape bar:<br>– for about 8 seconds after your camcorder is turned on and calculates the remaining amount of tape.<br>– for about 8 seconds after a cassette is inserted and your camcorder calculates the remaining amount of tape.<br>– for about 8 seconds after ► is pressed in PLAYER mode.<br>– for about 8 seconds after DISPLAY is pressed to display the screen indicators.<br>– for the period of tape rewinding, forwarding or picture search in PLAYER mode. | PLAYER CAMERA |
| | ON | To always display the remaining tape bar. | |

**Notes on the LP mode**
- When you record a tape in the LP mode on your camcorder, we recommend playing back the tape on your camcorder. When you play back the tape on other camcorders or VCRs, noise may occur in images or sound.
- When you record in the LP mode, we recommend using a Sony video cassette so that you can get the most out of your camcorder.
- When you record in both the SP and LP modes on one tape, or you record some scenes in the LP mode, the playback image may be distorted.
- Noise may occur also when you play back on your camcorder tapes recorded in the LP mode on other camcorders or VCRs.
- When you record a tape in the LP mode on your camcorder, recording is carried out in the standard 8 mm system.



## Changing the menu settings

**Notes on ORC setting**
- Each time you eject the cassette, the ORC setting will be canceled. If necessary, set the setting.
- You cannot use this setting on a tape with the red mark on the cassette exposed. (i. e. the tape is write-protected)
- When you set ORC TO SET, a non-recorded section of about 0.1 second appears on the tape. However, note that this non-recorded section disappears from the tape when you continue recording from this section.
- To check if you have already set the ORC setting, select ORC TO SET in the menu settings. "ORC ON" is displayed if ORC TO SET is already set.

| Icon/item | Mode | Meaning | POWER switch |
|---|---|---|---|
| CLOCK SET | —— | To set the date or time. (p. 16) | CAMERA |
| AUTO DATE | ● ON | To record the date for 10 seconds after recording has started. | CAMERA |
| | OFF | To cancel the auto date function. | |
| USB STREAM | ● OFF | To deactivate the USB Streaming function. | PLAYER CAMERA |
| | ON | To activate the USB Streaming function. | |
| LTR SIZE | ● NORMAL | To display selected menu items in normal size. | PLAYER CAMERA |
| | 2× | To display selected menu items at twice the normal size. | |
| LANGUAGE | ● ENGLISH | To display the following information indicators in English: min, STBY, REC, VOL, END SEARCH and START. | PLAYER CAMERA |
| | FRANÇAIS | To display the information indicators in French. | |
| | ESPAÑOL | To display the information indicators in Spanish. | |
| | PORTUGUÊS | To display the information indicators in Portuguese. | |
| | 中文 | To display the information indicators in Chinese. | |
| | 한국어 | To display the information indicators in Korean. | |
| DEMO MODE | ● ON | To make the demonstration appear. | CAMERA |
| | OFF | To cancel the demonstration mode. | |

**Notes on DEMO MODE**
- You cannot select DEMO MODE when a cassette is inserted in your camcorder.
- DEMO MODE is set to STBY (Standby) at the factory and the demonstration starts about 10 minutes after you have set the POWER switch to CAMERA without a cassette inserted.
  To cancel the demonstration, insert a cassette, set the POWER switch to other than CAMERA, or set DEMO MODE to OFF.
- When NIGHTSHOT is set to ON, "NIGHTSHOT" indicator appears on the screen and you cannot select DEMO MODE in the menu settings.

### Changing the menu settings

| Icon/item | Mode | Meaning | POWER switch |
|---|---|---|---|
| ETC WORLD TIME | —— | To set the clock to the local time. Turn the SEL/PUSH EXEC dial to set the time difference. The clock changes by the time difference you set here. If you set the time difference to 0, the clock returns to the originally set time. | CAMERA |
| BEEP | ● MELODY | To output the melody when you start/stop recording or when an unusual condition occurs on your camcorder | PLAYER CAMERA |
| | NORMAL | To output the beep instead of the melody | |
| | OFF | To cancel the melody and beep sound | |
| COMMANDER* | ● ON | To activate the Remote Commander supplied with your camcorder | PLAYER CAMERA |
| | OFF | To deactivate the Remote Commander to avoid unintentional operations caused by other VCR's remote controls. | |
| DISPLAY | ● LCD | To show the display on the LCD screen and in the viewfinder | PLAYER CAMERA |
| | V-OUT/LCD | To show the display on the TV screen, LCD screen, and in the viewfinder | |
| REC LAMP | ● ON | To light up the recording lamp at the front of your camcorder when recording | CAMERA |
| | OFF | To turn the recording lamp off so that the subject is not aware of the recording | |

**In more than 5 minutes after removing the power source**
The "COMMANDER"* item is returned to the default setting.
The other menu items are held in memory even when the battery is removed.

**Recording a close-up picture**
When REC LAMP is set to ON, the red recording lamp on the front of the camcorder may reflect on the subject if it is close. In this case, we recommend you set REC LAMP to OFF.

* CCD-TRV107/TRV408 only





## Types of trouble and their solutions

If you run into any problem using your camcorder, use the following table to troubleshoot the problem. If the problem persists, disconnect the power source and contact your Sony dealer or local authorized Sony service facility. If "C:□□:□□" appears on the screen, the self-diagnosis display function has worked. See page 77.

### In the recording mode

| Symptom | Cause and/or Corrective Actions |
|---|---|
| START/STOP does not operate. | • The POWER switch is set to OFF (CHG) or PLAYER.<br>→ Set it to CAMERA. (p. 19)<br>• The tape has run out.<br>→ Rewind the tape or insert a new one. (p. 18, 29)<br>• The write-protect tab is set to expose the red mark.<br>→ Use a new tape or slide the tab. (p. 18)<br>• The tape is stuck to the drum (moisture condensation).<br>→ Remove the cassette and leave your camcorder for at least 1 hour to acclimate. (p. 84) |
| The power goes off. | • While being operated in CAMERA mode, your camcorder has been in the standby mode for more than 5 minutes.<br>→ Set the POWER switch to OFF (CHG) and then to CAMERA again. (p. 19)<br>• The battery pack is dead or nearly dead.<br>→ Install a fully charged battery pack. (p. 11, 12) |
| The image on the viewfinder screen is not clear. | • The viewfinder lens is not adjusted.<br>→ Adjust the viewfinder lens. (p. 23) |
| The SteadyShot function does not work.* | • STEADYSHOT is set to OFF in the menu settings.<br>→ Set it to ON. (p. 68)<br>• The wide mode is set to 16:9FULL.<br>→ Set it to OFF. (p. 68) |
| The autofocusing function does not work. | • The setting is the manual focus mode.<br>→ Press FOCUS to return to the autofocus mode. (p. 41)<br>• Shooting conditions are not suitable for autofocus.<br>→ Adjust to focus manually. (p. 41) |
| The ⊗ indicator flashes in the viewfinder. | • The video heads may be dirty.<br>→ Clean the heads using the Sony V8-25CLD cleaning cassette (optional). (p. 85) |
| The picture does not appear in the viewfinder. | • The LCD panel is open.<br>→ Close the LCD panel. (p. 20) |
| A vertical band appears when you shoot a subject such as lights or a candle flame against a dark background. | • The contrast between the subject and background is too high. This is not a malfunction. |
| A vertical band appears when you shoot a very bright subject. | • This is not a malfunction. |

(continued on the following page)





### Types of trouble and their solutions

| Symptom | Cause and/or Corrective Actions |
|---|---|
| An unknown picture is displayed on the screen. | • If 10 minutes elapse after you set the POWER switch to CAMERA or DEMO MODE is set to ON in the menu settings without a cassette inserted, your camcorder automatically starts the demonstration.<br>→ Insert a cassette and the demonstration stops. You can also cancel DEMO MODE. (p. 71) |
| The picture is recorded in incorrect or unnatural colors. | • NIGHTSHOT is set to ON.<br>→ Set it to OFF. (p. 26) |
| The picture appears too bright, and the subject does not appear on the screen. | • NIGHTSHOT is set to ON in a bright place.<br>→ Set it to OFF or use the NightShot function in a dark place. (p. 26)<br>• The backlight function is working.<br>→ Cancel it. (p. 25) |
| A horizontal black band appears when shooting a TV screen or computer screen.* | • Set STEADYSHOT to OFF in the menu setting. (P. 68) |

* CCD-TRV308/TRV408/TRV608 only

### In the playback mode

| Symptom | Cause and/or Corrective Actions |
|---|---|
| The tape does not move when a video control button is pressed. | • The POWER switch is set to CAMERA or OFF (CHG).<br>→ Set it to PLAYER. (p. 29) |
| The playback button does not work. | • The tape has run out.<br>→ Rewind the tape. (p. 29) |
| The playback picture is not clear or does not appear. | • The television's video channel is not adjusted correctly.<br>→ Adjust it. (p. 32)<br>• EDIT is set to ON in the menu settings.<br>→ Set it to OFF. (p. 69)<br>• The video head may be dirty.<br>→ Clean the heads using the Sony V8-25CLD cleaning cassette (optional). (p. 85) |
| No sound or only a low sound is heard when playing back a tape. | • The volume is turned to minimum.<br>→ Open the LCD panel and press VOLUME +. (p. 29) |

### In the recording and playback modes

| Symptom | Cause and/or Corrective Actions |
|---|---|
| The power does not turn on. | • The battery pack is not installed, or is dead or nearly dead.<br>→ Install a charged battery pack. (p. 11, 12)<br>• The AC power adaptor is not connected to a wall outlet.<br>→ Connect the AC power adaptor to a wall outlet. (p. 15) |



### Types of trouble and their solutions

| Symptom | Cause and/or Corrective Actions |
|---|---|
| The end search function does not work. | • The tape was ejected after recording.<br>• You have not recorded on the cassette yet. |
| The battery pack discharges quickly. | • The operating temperature is too low.<br>• The battery pack is not fully charged.<br>→ Charge the battery pack fully again. (p. 11, 12)<br>• The battery pack is completely dead, and cannot be recharged.<br>→ Replace with a new battery pack. (p. 11) |
| The remaining battery time indicator does not indicate the correct time. | • You have used the battery pack in an extremely hot or cold environment for a long time.<br>• The battery pack is completely dead, and cannot be recharged.<br>→ Replace with a new battery pack. (p. 11)<br>• The battery pack is not fully charged.<br>• A deviation has occured in the remaining battery time.<br>→ Charge the battery pack fully again. (p. 11, 12) |
| The power goes off although the remaining battery time indicator indicates that the battery pack has enough power to operate. | • A deviation has occured in the remaining battery time.<br>→ Charge the battery pack fully again so that the indication on the battery remaining indicator is correct. (p. 11, 12) |
| The cassette cannot be removed from the holder. | • The power source is disconnected.<br>→ Connect it firmly. (p. 11, 15)<br>• The battery pack is dead.<br>→ Use a charged battery pack. (p. 11, 12) |
| The ⏸ and ⏏ indicators flash and no functions except for cassette ejection work. | • Moisture condensation has occurred.<br>→ Remove the cassette and leave your camcorder for at least 1 hour to acclimate. (p. 84) |
| The remaining tape indicator is not displayed. | • The REMAIN is set to AUTO in the menu settings.<br>→ Set it to ON to always display the remaining tape indicator. (p. 70) |

### Others

| Symptom | Cause and/or Corrective Actions |
|---|---|
| Easy Dubbing does not function. | • Your VCR and/or video camera recorder is not set correctly.<br>→ Make sure the input selector of the VCR is set to LINE. Also, make sure the power switch of the video camera is set to VTR/VCR. (p. 51)<br>• The IR SETUP code or PAUSE MODE is not set correctly.<br>→ Select the correct IR SETUP code and PAUSE MODE, according to your VCR. Then confirm VCR operation with the IR TEST function. (p. 52 to 55) |

(continued on the following page)

### Types of trouble and their solutions

| Symptom | Cause and/or Corrective Actions |
|---|---|
| You cannot install the USB driver.*1) | • Your camcorder was connected to your computer with the USB cable before installing the USB driver, so the driver was not recognized by the computer.<br>➔ Uninstall the unrecognized driver, and then reinstall the driver. (p. 60) |
| USB Streaming function does not work*1) | • The USB driver is not installed correctly.<br>➔ Uninstall the unrecognized driver, and then reinstall the driver. (p. 61 to 63)<br>• Your computer's operating system is Windows 98 or earlier.<br>• The USB cable was not connected before starting up the application software.<br>➔ Connect the USB cable before starting up the application software. (p. 63) |
| The Remote Commander supplied with your camcorder does not work.*2) | • COMMANDER is set to OFF in the menu settings.<br>➔ Set it to ON. (p. 72)<br>• Something is blocking the infrared rays.<br>➔ Remove the obstacle.<br>• The batteries are inserted in the battery holder with the + – polarities incorrectly matching the + – marks.<br>➔ Insert the batteries with the correct polarity. (p. 96)<br>• The batteries are dead.<br>➔ Insert new ones. (p. 96) |
| The date or time indicator does not appear, and the bars "--:--:--" appear. | • Set the date and time. (p. 16) |
| The melody or beep sounds for 5 seconds. | • Moisture condensation has occurred.<br>➔ Remove the cassette and leave your camcorder for at least 1 hour to acclimate. (p. 84)<br>• Some troubles have occurred in your camcorder.<br>➔ Remove the cassette and insert it again, then operate your camcorder. |
| No function works though the power is on. | • Disconnect the power cord of the AC power adaptor or remove the battery pack, then reconnect it after about 1 minute. Turn the power on. (p. 19) If the functions still do not work, press RESET using a sharp-pointed object. (If you press RESET, all the settings including the date and time return to the default.) (p. 95) |
| While charging the battery pack, no indicator appears or the indicator flashes in the display window. | • The AC power adaptor is disconnected.<br>➔ Connect it firmly. (p. 15)<br>• The battery pack is not installed properly.<br>➔ Install it properly.<br>• Something is wrong with the battery pack.<br>➔ Contact your Sony dealer or local authorized Sony service facility. |
| You cannot charge the battery pack installed to your camcorder. | • The POWER switch is not set to OFF (CHG).<br>➔ Set it to OFF (CHG). |

*1) CCD-TRV608 only
*2) CCD-TRV107/TRV408 only



## Self-diagnosis display

Your camcorder has a self-diagnosis display function.
This function displays the current condition of your camcorder as a 5-digit code (a combination of a letter and figures) on the LCD screen, in the viewfinder or in the display window.
If a 5-digit code is displayed, check the following code chart. The last two digits (indicated by □□) will differ depending on the state of your camcorder.

**LCD screen, viewfinder or display window**

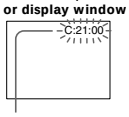


**Self-diagnosis display**
• C:□□:□□
You can service your camcorder yourself.
• E:□□:□□
Contact your Sony dealer or local authorized Sony service facility.

| Five-digit display | Cause and/or Corrective Actions |
|---|---|
| C:04:□□ | • You are using a battery pack that is not an "InfoLITHIUM" battery pack.<br>➔ Use an "InfoLITHIUM" battery pack. (p. 81) |
| C:21:□□ | • Moisture condensation has occurred.<br>➔ Remove the cassette and leave your camcorder for at least 1 hour to acclimate. (p. 84) |
| C:22:□□ | • The video heads are dirty.<br>➔ Clean the heads using the Sony V8-25CLD cleaning cassette (optional). (p. 85) |
| C:31:□□<br>C:32:□□ | • A malfunction other than the above that you can service has occurred.<br>➔ Remove the cassette and insert it again, then operate your camcorder.<br>➔ Disconnect the power cord of the AC power adaptor or remove the battery pack. After reconnecting the power source, operate your camcorder. |
| E:20:□□<br>E:61:□□<br>E:62:□□ | • A malfunction that you cannot service has occurred.<br>➔ Contact your Sony dealer or local authorized Sony service facility and inform them of the 5-digit code. (example: E:61:10) |

If you are unable to rectify the problem even if you try corrective actions a few times, contact your Sony dealer or local authorized Sony service facility.





## Warning indicators and messages

If indicators and messages appear on the screen or in the display window, check the following:
See the page in parentheses "( )" for more information.

### Warning indicators

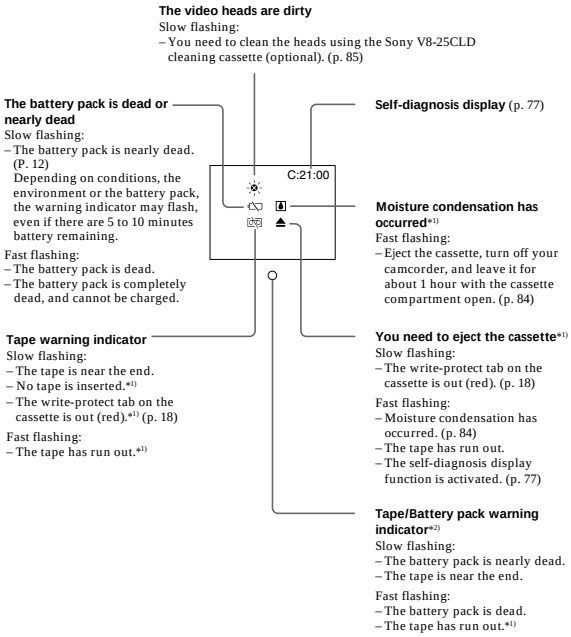


*1) You hear the melody or beep sound.
*2) This indicator appears in the viewfinder only.



### Warning indicators and messages

#### Warning messages

| | |
|---|---|
| • CLOCK SET | Set the date and time. (p. 16) |
| • FOR "InfoLITHIUM" BATTERY ONLY | Use an "InfoLITHIUM" battery pack. (p. 81) |
| • NO TAPE*1) | Insert a cassette tape. |
| • TAPE END*1) | The tape has reached the end. |
| • CLEANING CASSETTE*2) | The video heads are dirty. (p. 85) |
| • START/STOP KEY | Press START/STOP to activate the ORC setting. This message is displayed in white. (p. 70) |
| • ORC | The ORC setting is working. This message is displayed in white. (p. 70) |

*1) You hear the melody or beep sound.
*2) The ⊗ indicator and "CLEANING CASSETTE" message appear one after another on the screen.

— Additional Information —

# About video cassettes

## Selecting the cassette type

You can use both Hi8 Hi8 and standard 8 mm 8 video cassettes on your camcorder. When you use a Hi8 Hi8 video cassette, recording and playback are carried out in the Hi8 Hi8 system. When you use a standard 8 mm 8 video cassette, recording and playback are carried out in the standard 8 mm 8 system.
However, if you record on a Hi8 Hi8 video cassette in the LP mode, recording is carried out in the standard 8 mm 8 system.
If you play back a tape recorded on a different video recorder on your camcorder, the playback mode is automatically selected according to the format in which the tape has been recorded.

This Hi8 Hi8 system is an extension of the standard 8 mm 8 system, and was developed to produce higher quality pictures.
You cannot play back a tape recorded in the Hi8 Hi8 system correctly on video recorders / players other than a Hi8 video recorder / player.

8 is a trademark.
Hi8 is a trademark.

## When you play back

The playback mode (SP / LP) and system, Hi8 Hi8, or standard 8 mm 8 are automatically selected according to the format in which the tape has been recorded. The quality of the recorded picture in the LP mode, however, will not be as good as the SP mode.

### Foreign 8 mm video

Because TV color systems differ from country to country, you may not be able to play back foreign pre-recorded tapes. Refer to "Using your camcorder abroad" (p. 83) to check the TV color systems used in foreign countries.



# About the "InfoLITHIUM" battery pack

### What is the "InfoLITHIUM" battery pack?

The "InfoLITHIUM" battery pack is a lithium-ion battery pack that has functions for communicating information related to operating conditions between your camcorder and the AC power adaptor.
The "InfoLITHIUM" battery pack calculates the power consumption according to the operating conditions of your camcorder, and displays the remaining battery time in minutes.

### Charging the battery pack

- Be sure to charge the battery pack before you start using your camcorder.
- We recommend charging the battery pack in an ambient temperature of between 10°C to 30°C (50°F to 86°F) until FULL appears indicating that the battery pack is fully charged, in the display window. If you charge the battery pack outside of this temperature range, you may not be able to efficiently charge the battery pack.
- After charging is completed, either disconnect the cable from the DC IN jack on your camcorder or remove the battery pack.

### Effective use of the battery pack

- Battery performance decreases in low-temperature surroundings. So, the time that the battery pack can be used is shorter in cold places. We recommend the following to use the battery pack longer:
  – Put the battery pack in a pocket to warm it up, and insert it in your camcorder immediately before you start taking shots.
  – Use a large capacity battery pack (NP-FM50 / FM70 / QM71 / FM90 / FM91 / QM91, optional).
- Frequently using the LCD panel or frequently operating playback, fast forward or rewind wears out the battery pack faster. We recommend using a large capacity battery pack (NP-FM50 / FM70 / QM71 / FM90 / FM91 / QM91, optional).
- Be certain to turn the POWER switch to OFF (CHG) when not taking shots or playing back on your camcorder. Battery pack power is also consumed when your camcorder is in the standby mode or playback is paused.
- Have spare battery packs handy for two or three times the expected recording time, and make a trial recording before the actual recording.
- Do not expose the battery pack to water. The battery pack is not water-resistant.

### Remaining battery time indicator

- If the power goes off although the remaining battery time indicator indicates that the battery pack has enough power to operate, charge the battery pack fully again so that the indication on the remaining battery time indicator is correct. Note, however, that the correct battery indication sometimes will not be restored if it is used in high temperatures for a long time or left in a fully charged state, or the battery pack is frequently used. Regard the remaining battery time indication as approximate.
- The mark, indicating there is little remaining battery time, sometimes flashes depending on the operating conditions or ambient temperature and environment even if the remaining battery time is 5 to 10 minutes.

### How to store the battery pack

- If the battery pack is not used for a long time, do the following once a year to maintain proper function.
  1. Fully charge the battery pack.
  2. Discharge on your camcorder.
  3. Remove the battery pack from your camcorder and store it in a dry, cool place.
- To discharge the battery pack on your camcorder, leave your camcorder in CAMERA (standby) mode without a cassette inserted until the power goes off.





## About "InfoLITHIUM" battery pack

### Battery life

- The battery life is limited. Battery capacity drops little by little as you use it more and more, and as time passes. When the available battery time is shortened considerably, a probable cause is that the battery pack has reached the end of its life. Please buy a new battery pack.
- The battery life varies according to storage and operating conditions, and environment for each battery pack.



# Using your camcorder abroad

## Using your camcorder abroad

You can use your camcorder in any country or area with the AC power adaptor supplied with your camcorder within 100 V to 240 V AC, 50 / 60 Hz.

When charging the battery pack, use a commercially available AC plug adaptor **[a]**, if necessary, depending on the design of the wall outlet **[b]**.

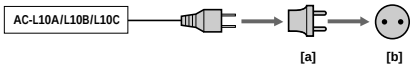


Your camcorder is an NTSC system based camcorder. If you want to view the playback picture on a TV, it must be an NTSC system based TV with Video / Audio input jack. The following shows TV color systems used overseas.

**NTSC system**
Bahama Islands, Bolivia, Canada, Central America, Chile, Colombia, Ecuador, Guyana, Jamaica, Japan, Korea, Mexico, Peru, Surinam, Taiwan, the Philippines, the U.S.A., Venezuela, etc.

**PAL system**
Australia, Austria, Belgium, China, Czech Republic, Denmark, Finland, Germany, Holland, Hong Kong, Hungary, Italy, Kuwait, Malaysia, New Zealand, Norway, Poland, Portugal, Singapore, Slovak Republic, Spain, Sweden, Switzerland, Thailand, United Kingdom, etc.

**PAL-M system**
Brazil

**PAL-N system**
Argentina, Paraguay, Uruguay

**SECAM system**
Bulgaria, France, Guiana, Iran, Iraq, Monaco, Russia, Ukraine, etc.

## Simple setting of clock by time difference

You can easily set the clock to the local time by setting a time difference. Select WORLD TIME in the menu settings. See page 72 for more information.

# Maintenance information and precautions

## Moisture condensation

If your camcorder is brought directly from a cold place to a warm place, moisture may condense inside your camcorder, on the surface of the tape, or on the lens. In this condition, the tape may stick to the head drum and be damaged or your camcorder may not operate correctly. If there is moisture inside your camcorder, the beep sounds and the indicator flashes. When the ⏏ indicator flashes at the same time, the cassette is inserted in your camcorder. If moisture condenses on the lens, the indicator will not appear.

### If moisture condensation occurs

None of the functions except cassette ejection will work. Eject the cassette, turn off your camcorder, and leave it for about 1 hour with the cassette compartment open. Your camcorder can be used again if the indicator does not appear when the power is turned on again.

**Note on moisture condensation**

Moisture may condense when you bring your camcorder from a cold place into a warm place (or vice versa) or when you use your camcorder in a hot place as follows:
– You bring your camcorder from a ski slope into a place warmed up by a heating device.
– You bring your camcorder from an air-conditioned car or room into a hot place outside.
– You use your camcorder after a squall or a shower.
– You use your camcorder in a high temperature and humid place.

**How to prevent moisture condensation**

When you bring your camcorder from a cold place into a warm place, put your camcorder in a plastic bag and tightly seal it. Remove the bag when the air temperature inside the plastic bag has reached the surrounding temperature (after about 1 hour).





## Maintenance information

### Cleaning the LCD screen

If fingerprints or dust make the LCD screen dirty, we recommend using a LCD Cleaning Kit (optional) to clean the LCD screen.

### Cleaning the video head

To ensure normal recording and clear pictures, clean the video heads.
The video head may be dirty when:
– the indicator and "CLEANING CASSETTE" message appear one after another on the screen or the indicator flashes on the screen.
– playback pictures contain noise.
– playback pictures are hardly visible.
– playback pictures do not appear.

[a] → [b]

**[a]** Slightly dirty
**[b]** Very dirty

If the above problem occurs, clean the video heads with the Sony V8-25CLD cleaning cassette (optional). Check the picture and if the above problem persists, repeat cleaning.

**Note on video heads**

When the playback pictures still contain noise even if you have cleaned the video heads with a cleaning cassette, the video heads may have worn down due to long use. If this is the case, they must be replaced with new heads. Contact your Sony dealer or local authorized Sony service facility.







## Charging the built-in rechargeable battery in your camcorder

A built-in rechargeable battery is supplied with your camcorder so as to retain the date and time, etc., regardless of the setting of the POWER switch. The rechargeable battery is always charged as long as you are using your camcorder. The battery, however, will get discharged in about 6 months if you do not use your camcorder at all. Even if the rechargeable battery is not charged, it will not affect the camcorder operation. To retain the date and time, etc., charge the battery pack if the battery pack is discharged.

**Charging the built-in rechargeable battery:**
– Connect your camcorder to the wall outlet using the AC power adaptor supplied with your camcorder, and leave your camcorder with the POWER switch turned off for more than 24 hours.
– Or install the fully charged battery pack in your camcorder, and leave your camcorder with the POWER switch turned off for more than 24 hours.

## Precautions

### Camcorder operation

- Operate your camcorder on 7.2 V (battery pack) or 8.4 V (AC power adaptor).
- For DC or AC operation, use the accessories recommended in these operating instructions.
- If any solid object or liquid get inside the casing, unplug your camcorder and have it checked by a Sony dealer before operating it any further.
- Avoid rough handling or mechanical shock. Be particularly careful with the lens.
- Keep the POWER switch set to OFF (CHG) when you are not using your camcorder.
- Do not wrap your camcorder with a towel, for example, and operate it. Doing so might cause heat to build up inside.
- Keep your camcorder away from strong magnetic fields or mechanical vibration. Noise may occur on images.
- Do not touch the LCD screen with your fingers or a sharp-pointed object.
- If your camcorder is used in a cold place, a residual image may appear on the LCD screen. This is not a malfunction.
- While using your camcorder, the back of the LCD screen may heat up. This is not a malfunction.





### Built-in light (CCD-TRV107/TRV308/TRV408/TRV608 only)

- Do not knock or jolt the built-in light while it is turned on as it may damage the bulb or shorten the life of the bulb.
- Do not leave the built-in light on while it is resting on or against something; it may cause a fire or damage the built-in light.

### On handling tapes

Do not insert anything into the small holes on the rear of the cassette. These holes are used to sense the type and thickness of the tape and if the recording tab is in or out.

### Camcorder care

- Remove the tape, and periodically turn on the power, operate the CAMERA and PLAYER sections and play back a tape for about 5 minutes when your camcorder is not to be used for a long time.
- Clean the lens with a soft brush to remove dust. If there are fingerprints on the lens, remove them with a soft cloth.
- Clean the camcorder body with a dry soft cloth, or a soft cloth lightly moistened with a mild detergent solution. Do not use any type of solvent which may damage the finish.
- Do not let sand get into your camcorder. When you use your camcorder on a sandy beach or in a dusty place, protect it from the sand or dust. Sand or dust may cause your camcorder to malfunction, and sometimes this malfunction cannot be repaired.

### AC power adaptor

- Unplug the unit from the wall outlet when you are not using the unit for a long time. To disconnect the power cord, pull it out by the plug. Never pull the power cord itself.
- Do not operate the unit with a damaged cord or if the unit has been dropped or damaged.
- Do not bend the power cord forcibly, or place a heavy object on it. This will damage the cord and may cause fire or electrical shock.
- Prevent metallic objects from coming into contact with the metal parts of the connecting section. If this happens, a short may occur and the unit may be damaged.
- Always keep metal contacts clean.
- Do not disassemble the unit.
- Do not apply mechanical shock or drop the unit.
- While the unit is in use, particularly during charging, keep it away from AM receivers and video equipment. AM receivers and video equipment disturb AM reception and video operation.
- The unit becomes warm during use. This is not a malfunction.
- Do not place the unit in locations that are:
  – Extremely hot or cold
  – Dusty or dirty
  – Very humid
  – Vibrating

## Maintenance information and precautions

### About care and storage of the lens

- Wipe the surface of the lens with a soft cloth in the following instances:
  - When there are fingerprints on the lens surface
  - In hot or humid locations
  - When the lens is used in environments susceptible to salt such as the seaside
- Store the lens in a well-ventilated location subject to little dirt or dust.

To prevent mold from growing on the lens, periodically perform the above.
We recommend turning on and operating your camcorder at least once per month to keep your camcorder in an optimum state for a long time.

### Battery pack

- Use only the specified charger or video equipment for the charging function.
- To prevent an accidental short circuit, do not allow metal objects to come into contact with the battery terminals.
- Keep the battery pack away from fire.
- Never expose the battery pack to temperatures above 60°C (140°F), such as in a car parked in the sun or under direct sunlight.
- Keep the battery pack dry.
- Do not expose the battery pack to any mechanical shock.
- Do not disassemble nor modify the battery pack.
- Attach the battery pack to the video equipment securely.
- Charging while some capacity remains does not affect the original battery capacity.

### Note on dry batteries (CCD-TRV107/TRV408 only)

To avoid possible damage from battery leakage or corrosion, observe the following:
– Be sure to insert the batteries with the + – polarities matched to the + – marks
– Dry batteries are not rechargeable
– Do not use a combination of new and old batteries
– Do not use different types of batteries
– Current drains from batteries when you are not using them for a long time
– Do not use leaking batteries

#### If batteries are leaking

- Wipe off the liquid in the battery compartment carefully before replacing the batteries.
- If you touch the liquid, wash it off with water.
- If the liquid get into your eyes, wash your eyes with a lot of water and then consult a doctor.

If any problem occurs, unplug your camcorder and contact your nearest Sony dealer.



— Quick Reference —

## Identifying the parts and controls

### Camcorder

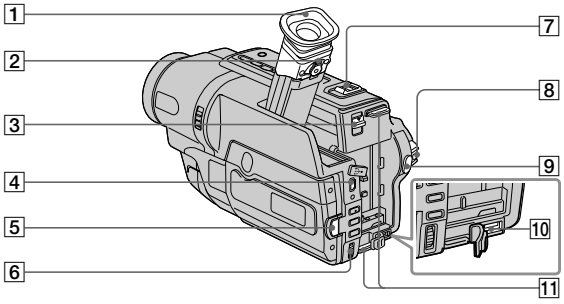


1 **Eyecup**
2 **Viewfinder lens adjustment lever** (p. 23)
3 **▼ BATT release lever** (p. 11)
4 **USB connector** (p. 61) (CCD-TRV608 only)
5 **OPEN button** (p. 19)
6 **SEL/PUSH EXEC dial** (p. 16, 67)
7 **Power zoom lever** (p. 22)
8 **POWER switch** (p. 19)
9 **START/STOP button** (p. 19)
10 **DC IN jack** (p. 12, 15)
11 **Hooks for shoulder strap** (p. 91)

**Attaching the shoulder strap**
Attach the shoulder strap supplied with your camcorder to the hooks for the shoulder strap.

Quick Reference



## Identifying the parts and controls

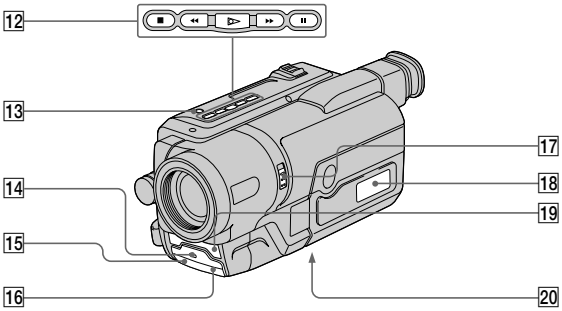


12 **Video control buttons** (p. 29, 31)
■ STOP (stop)
◀◀ REW (rewind)
▶ PLAY (playback)*
▶▶ FF (fastforward)
❚❚ PAUSE (pause)

13 **LIGHT button** (p. 46) (CCD-TRV107 / TRV308 / TRV408 / TRV608 only)

14 **Recording lamp** (p. 19)

15 **Infrared rays emitter** (p. 26)

16 **Remote sensor** (p. 96) (CCD-TRV107 / TRV408 only)

17 **NIGHTSHOT switch** (p. 26)

18 **Display window** (p. 97)

19 **Microphone** (p. 19)

20 **Tripod receptacle** (base)
Make sure that the length of the tripod screw is less than 5.5 mm (7 / 32 in.). Otherwise, you cannot attach the tripod securely and the screw may damage your camcorder.

* This button has a tactile dot.



## Identifying the parts and controls

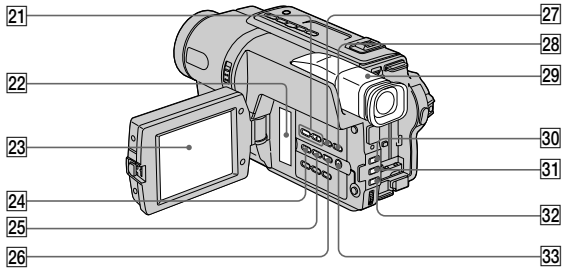


21 **VOLUME +*/– buttons** (p. 29)
22 **Speaker**
23 **LCD screen** (p. 19)
24 **EXPOSURE button** (p. 40)
25 **TITLE button** (p. 42, 44)
26 **EASY DUBBING button** (p. 51)
27 **DISPLAY button** (p. 30)
28 **END SEARCH button** (p. 28)
29 **Viewfinder** (p. 23)
30 **FADER button*** (p. 35)
31 **BACK LIGHT button** (p. 25)
32 **FOCUS button** (p. 41)
33 **MENU button*** (p. 67)

* This button has a tactile dot.

Quick Reference

## Identifying the parts and controls

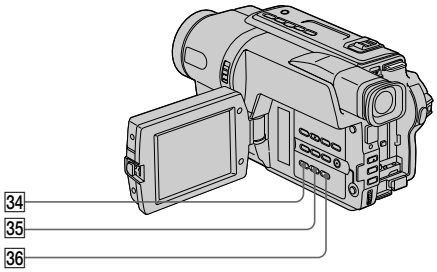


34 **DATE button** (p. 27)
35 **TIME button*** (p. 27)
36 **COUNTER RESET button** (p. 20)

* This button has a tactile dot.



## Identifying the parts and controls

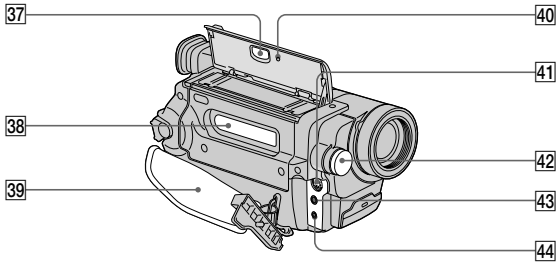


37 ⏏ **EJECT button** (p. 18)
38 **Cassette compartment** (p. 18)
39 **Grip strap**
40 **RESET button** (p. 76)
41 **S VIDEO OUT jack** (p. 32, 49, 51)
42 **Built-in light** (p. 46) (CCD-TRV107 / TRV308 / TRV408 / TRV608 only)
43 **A/V OUT jack** (p. 32, 49)
44 **RFU DC OUT (RFU adaptor DC output) jack** (p. 32)

**Fastening the grip strap**
Fasten the grip strap firmly.

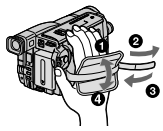

**Attaching the lens cap**
Attach the lens cap to the grip strap as illustrated.

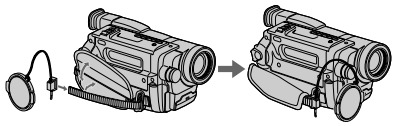

Quick Reference



## Identifying the parts and controls

### Remote Commander

**— CCD-TRV107/TRV408 only**
The buttons that share the same name on the Remote Commander and your camcorder function identically to the buttons on your camcorder.

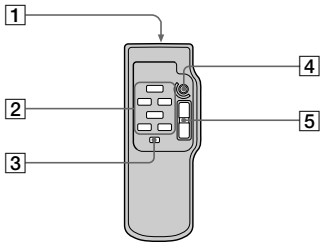


1 **Transmitter**
Point toward the remote sensor to control the camcorder after turning on the camcorder.
2 **Tape transport buttons** (p. 31)
3 **DISPLAY button** (p. 30)
4 **START/STOP button** (p. 19)
5 **Power zoom button** (p. 22)

**To prepare the Remote Commander**
Insert 2 size AA (R6) batteries by matching the + and – polarities on the batteries to the + – marks inside the battery compartment.

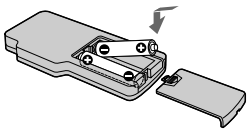

**Notes on the Remote Commander**
- Point the remote sensor away from strong light sources such as direct sunlight or overhead lighting. Otherwise, the Remote Commander may not function properly.
- Your camcorder works in the commander mode VTR 2. The commander modes 1, 2 and 3 are used to distinguish your camcorder from other Sony VCRs to avoid remote control unintentional operations. If you use another Sony VCR in the commander mode VTR 2, we recommend changing the commander mode or covering the sensor of the VCR with black paper.



## Identifying the parts and controls

### Operation indicators

**LCD screen and Viewfinder**

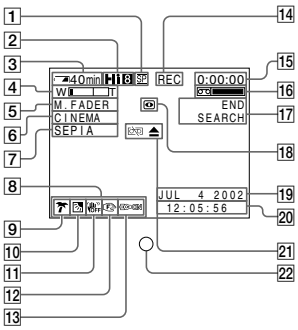


**Display window**

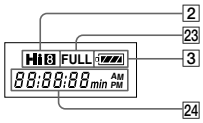


1 **Recording mode indicator** (p. 70)/ **Mirror mode indicator** (p. 20)
2 **Hi8 format indication** (p. 24)
3 **Remaining battery time indicator** (p. 24)
4 **Zoom indicator** (p. 22)/ **Exposure indicator** (p. 40)
5 **Fader indicator** (p. 35)
6 **Wide mode indicator** (p. 33)
7 **Picture effect indicator** (p. 37)
8 **Volume indicator** (p. 29)
9 **PROGRAM AE indicator** (p. 38)
10 **Backlight indicator** (p. 25)
11 **SteadyShot off indicator***1) (p. 69)
12 **Manual focusing indicator** (p. 41)
13 **Built-in light indicator***2) (p. 46)
14 **STBY/REC indicator** (p. 19)/ **Video control mode indicator** (p. 31)
15 **Tape counter indicator** (p. 24)/ **Self-diagnosis display indicator** (p. 77)
16 **Remaining tape indicator** (p. 24)
17 **END SEARCH indicator** (p. 28)
18 **NIGHTSHOT indicator** (p. 26)
19 **AUTO DATE indicator** (p. 17)/ **Date indicator** (p. 16, 27)
20 **Time indicator** (p. 16, 27)
21 **Warning indicators** (p. 78)
22 **Recording lamp** (p. 19)
This indicator appears in the viewfinder only.
23 **FULL charge indicator** (p. 12)
24 **Tape counter indicator** (p. 24)/ **DATE or TIME indicator** (p. 16, 27)/ **Self-diagnosis display indicator** (p. 77)

*1) CCD-TRV308 / TRV408 / TRV608 only
*2) CCD-TRV107 / TRV308 / TRV408 / TRV608 only

Quick Reference

# SECTION 2
# DISASSEMBLY

The following flow chart shows the disassembly procedure.

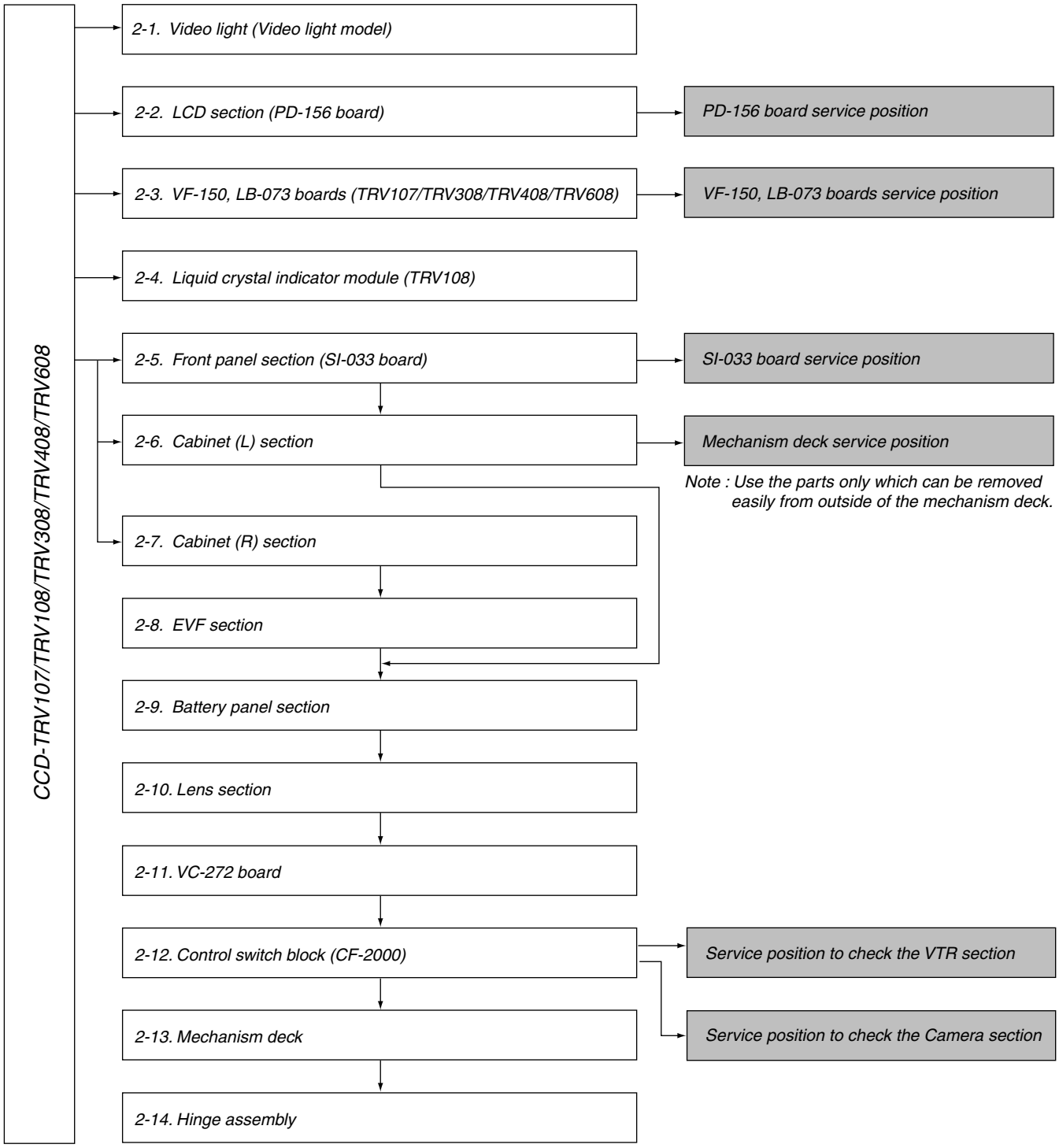


*Video light model :CCD-TRV107/TRV308/TRV408/TRV608*
*No video light model :CCD-TRV108*

***[CONNECTION OF EQUIPMENT]***

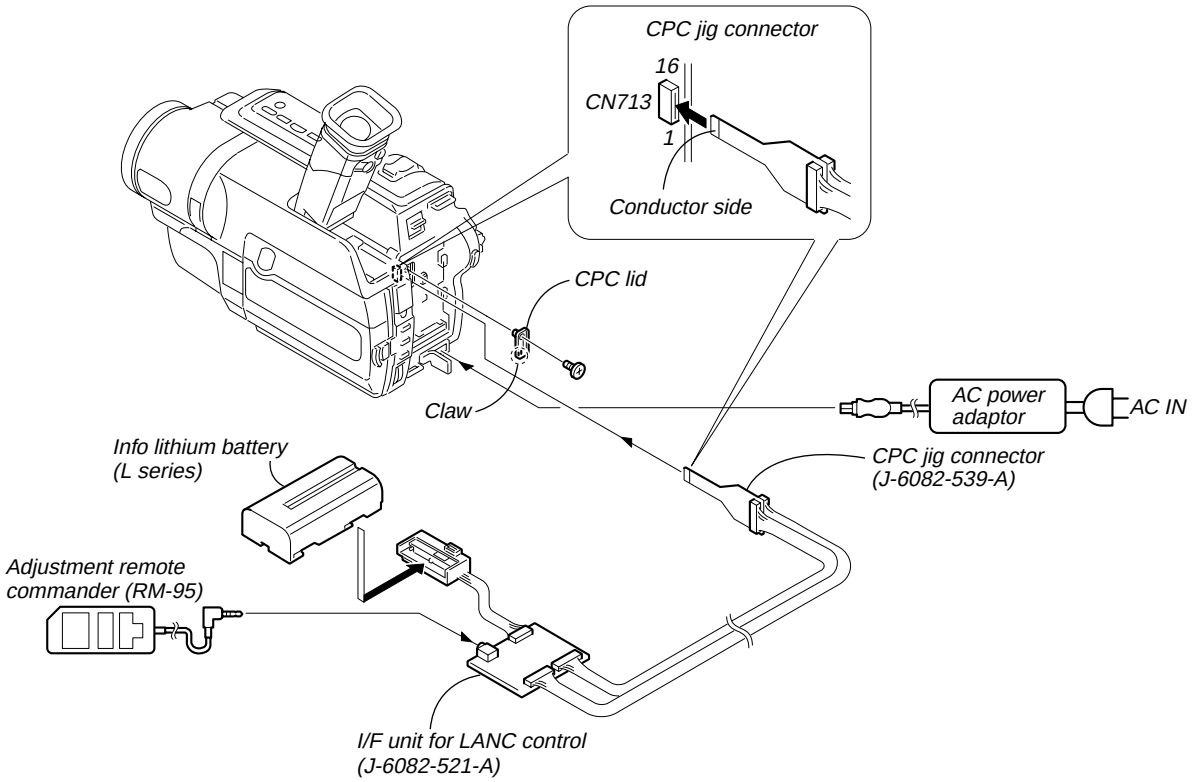


**NOTE:** Follow the disassembly procedure in the numerical order given.

## 2-1. VIDEO LIGHT (VIDEO LIGHT MODEL)

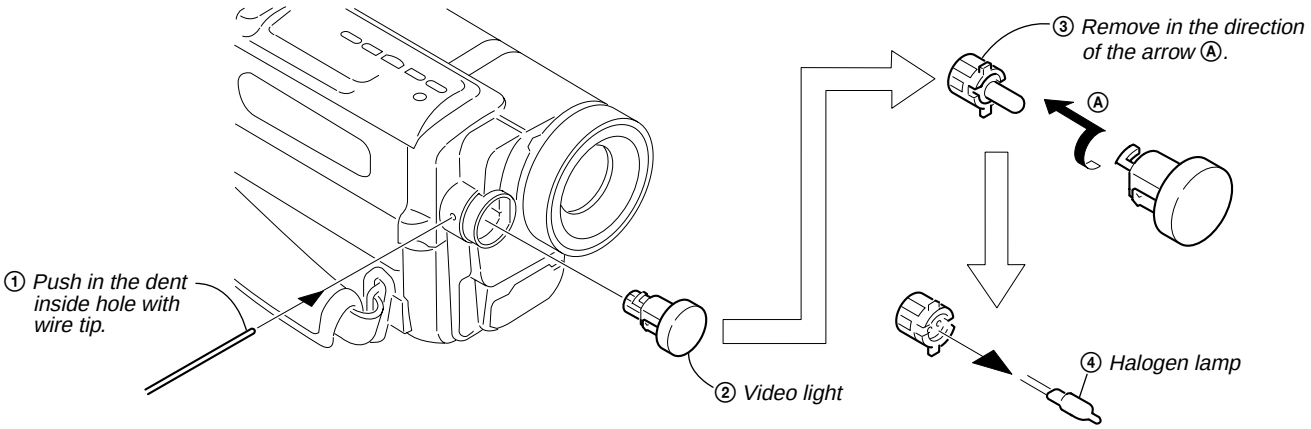

## 2-2. LCD SECTION (PD-156 BOARD)

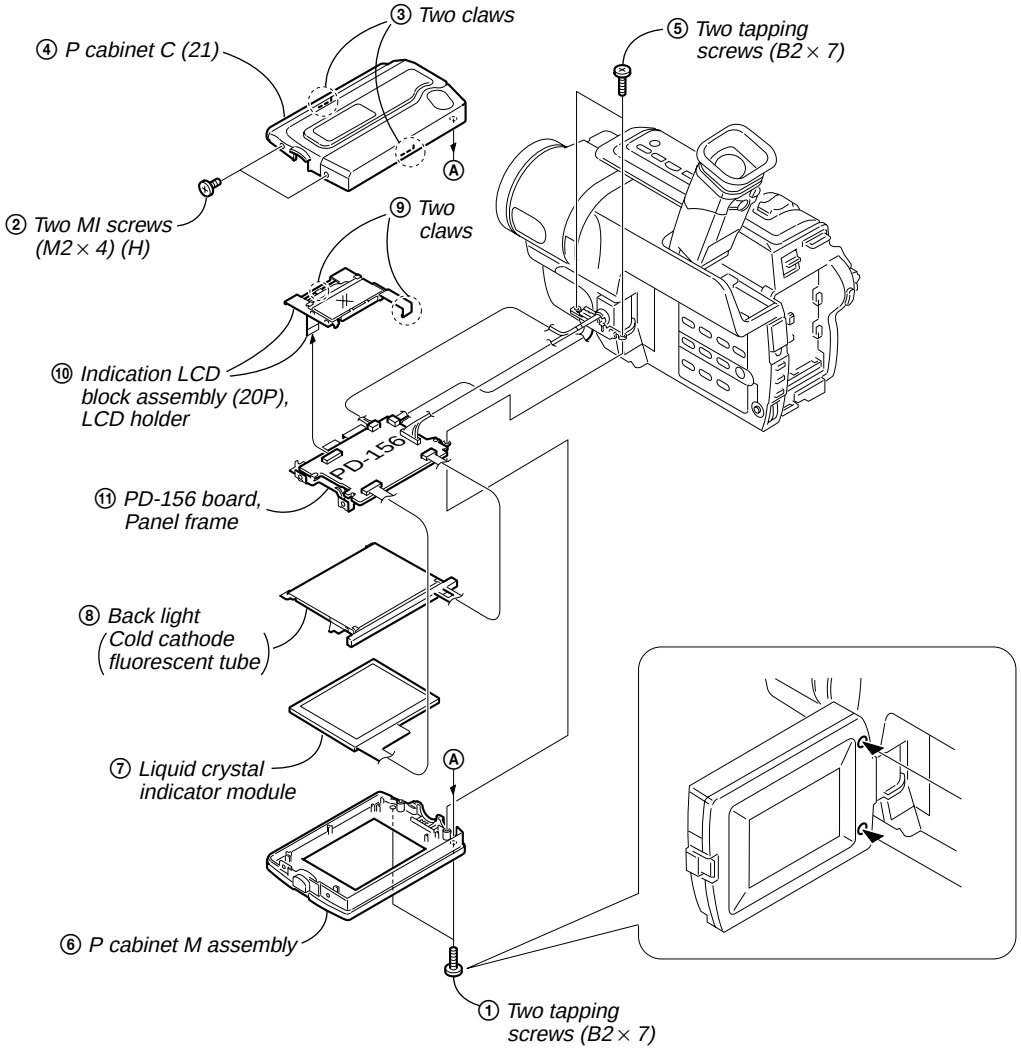


### *[PD-156 BOARD SERVICE POSITION]*

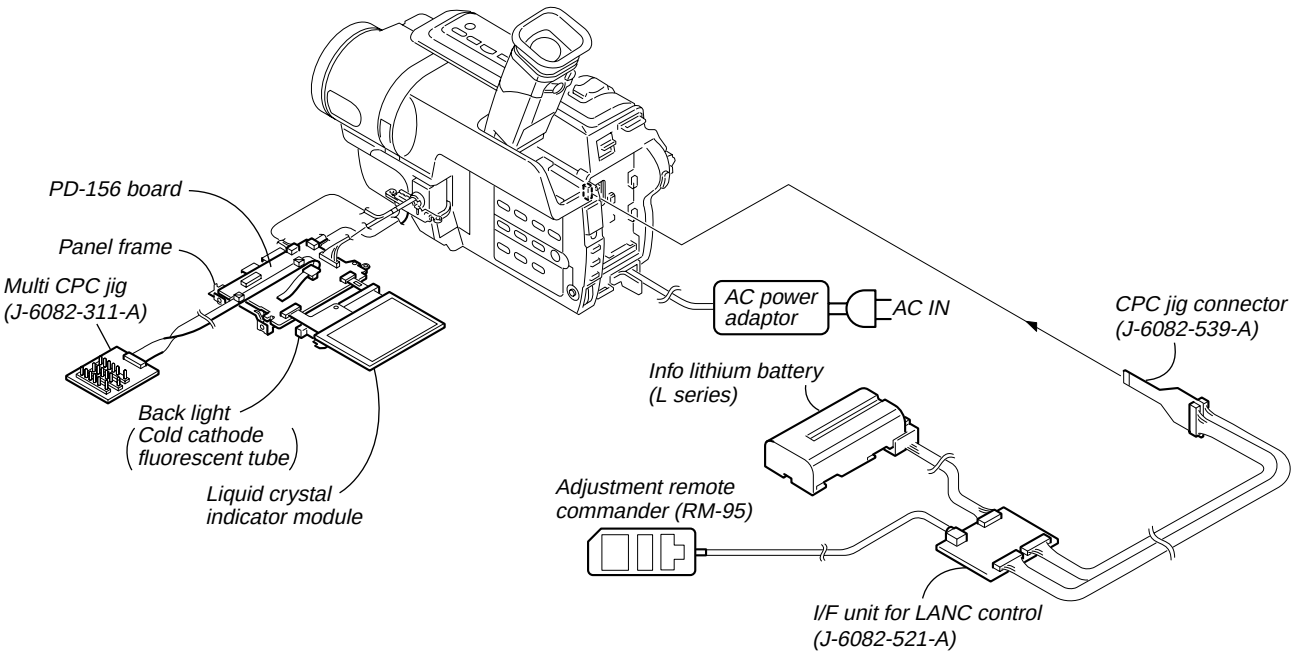

## 2-3. VF-150, LB-073 BOARDS (TRV107/TRV308/TRV408/TRV608)

① Raise the EVF in the Ⓐ direction and slide it in the Ⓑ direction.

② Two tapping screws (B2 × 5)

⑦ VF lens (B) assembly

⑤ EVF cabinet upper

⑥ Two claws

⑧ Caution
Before disengaging the 2 claws in step ⑦, hold the EVF lens facing downward and then disengage the 2 claws very slowly and carefully so that the internal 2 plastic sheets must not drop. Keep them in place with an appropriate piece of sheet so that hey do not drop out of their positions.

④ Claw

⑨ Two claws

⑩ Lamp guide

⑪ LB-073 board

⑫ VF-150 board

③ EVF cabinet rear assembly

### [VF-150, LB-073 BOARDS SERVICE POSITION]

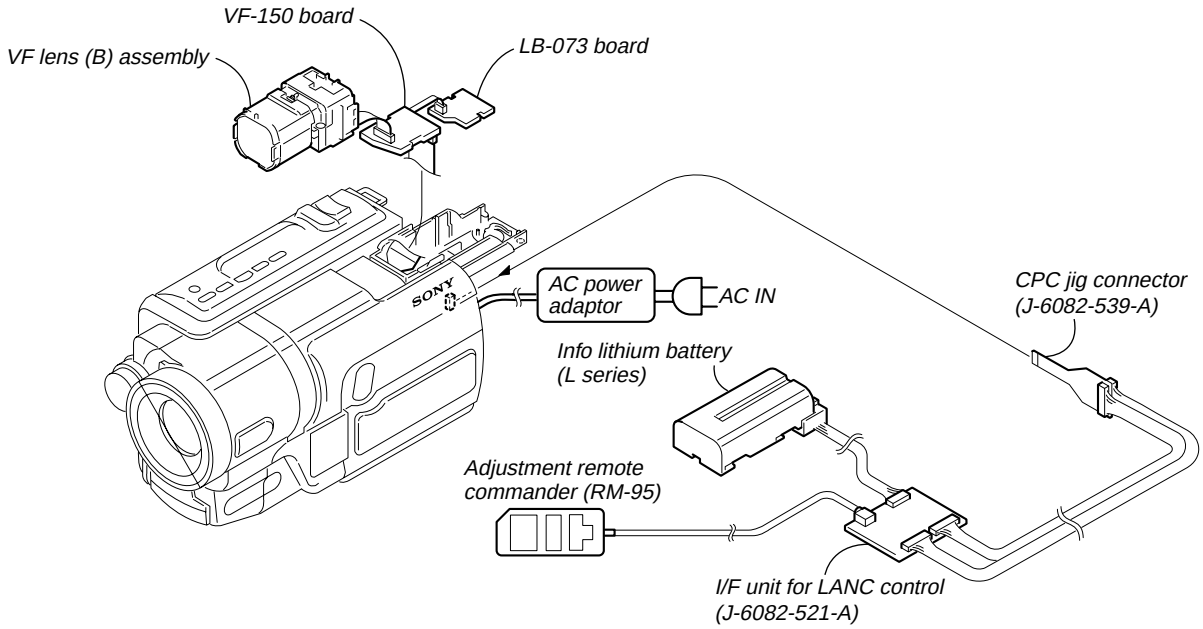

## 2-4. LIQUID CRYSTAL INDICATOR MODULE (TRV108)

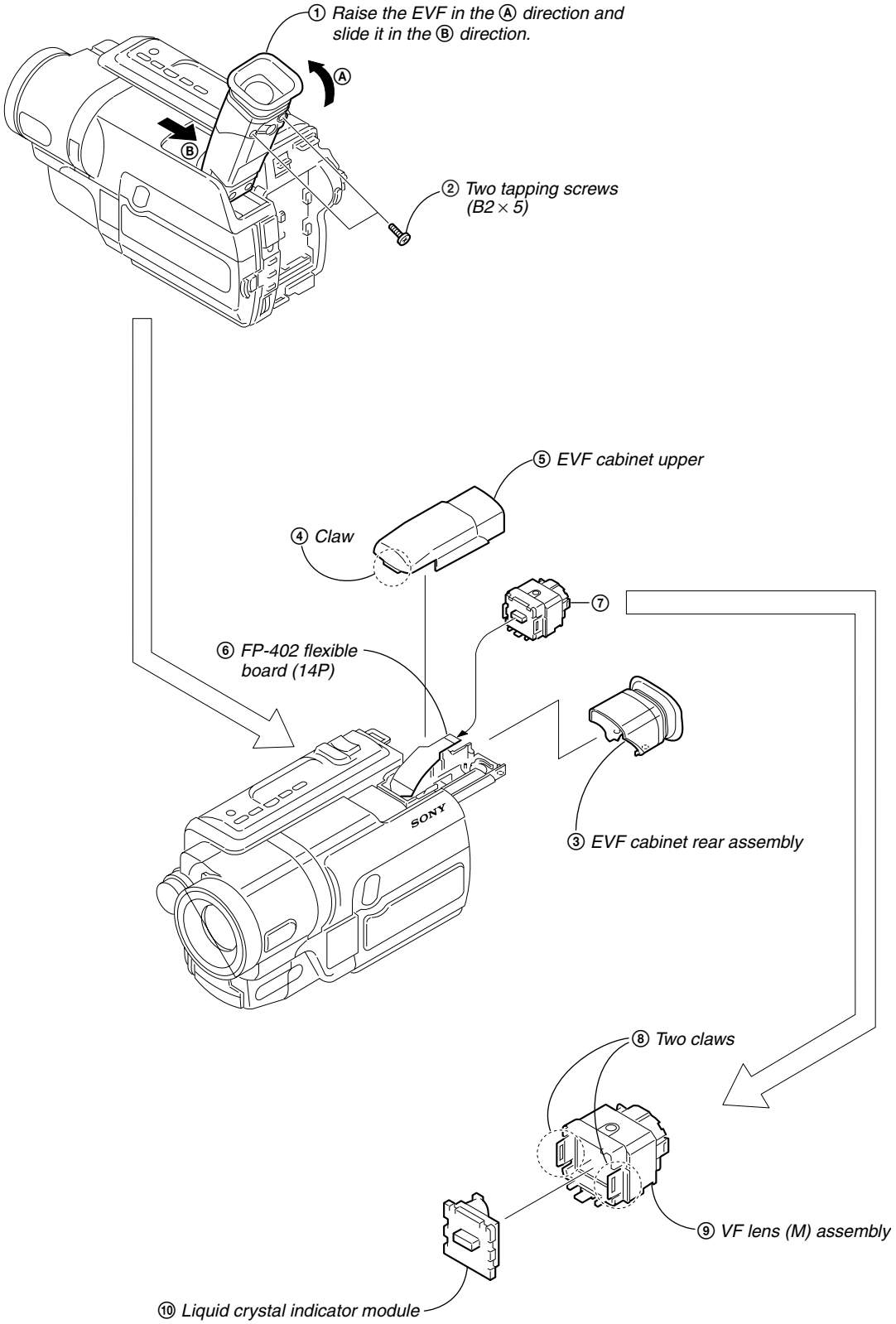

## 2-5. FRONT PANEL SECTION (SI-033 BOARD)

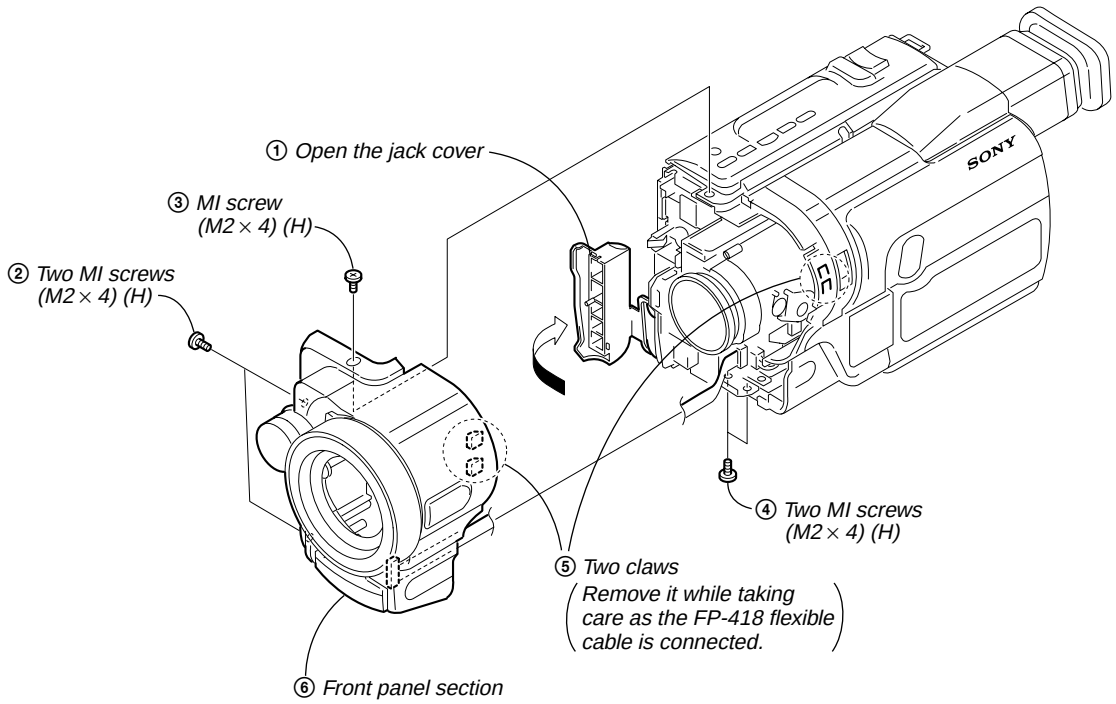


***[SI-033 BOARD SERVICE POSITION]***

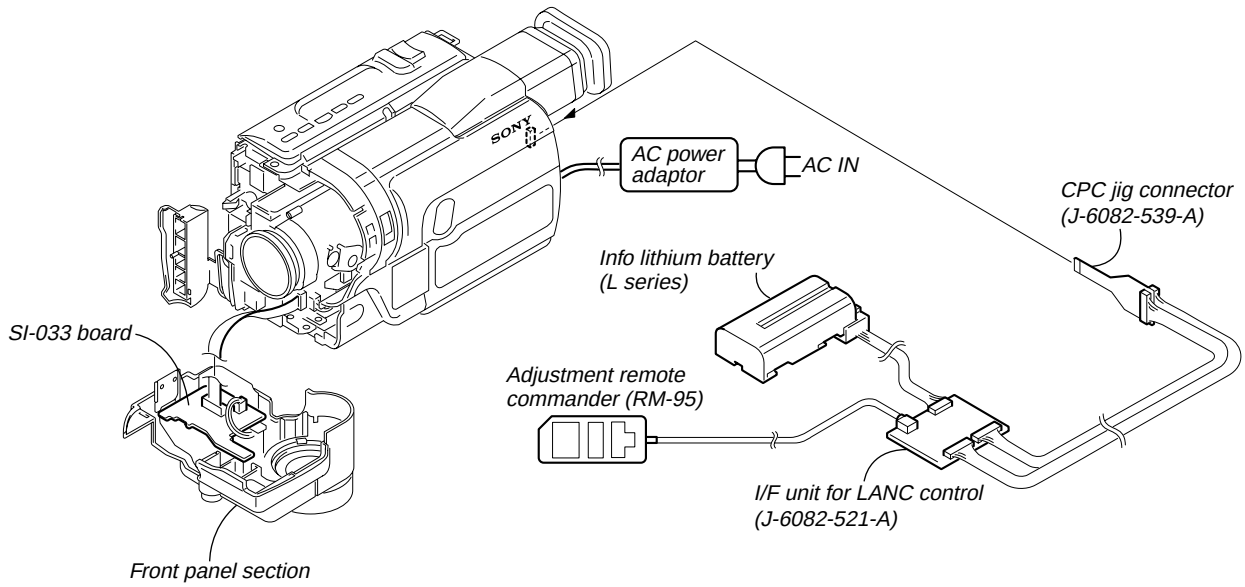

## 2-6. CABINET (L) SECTION

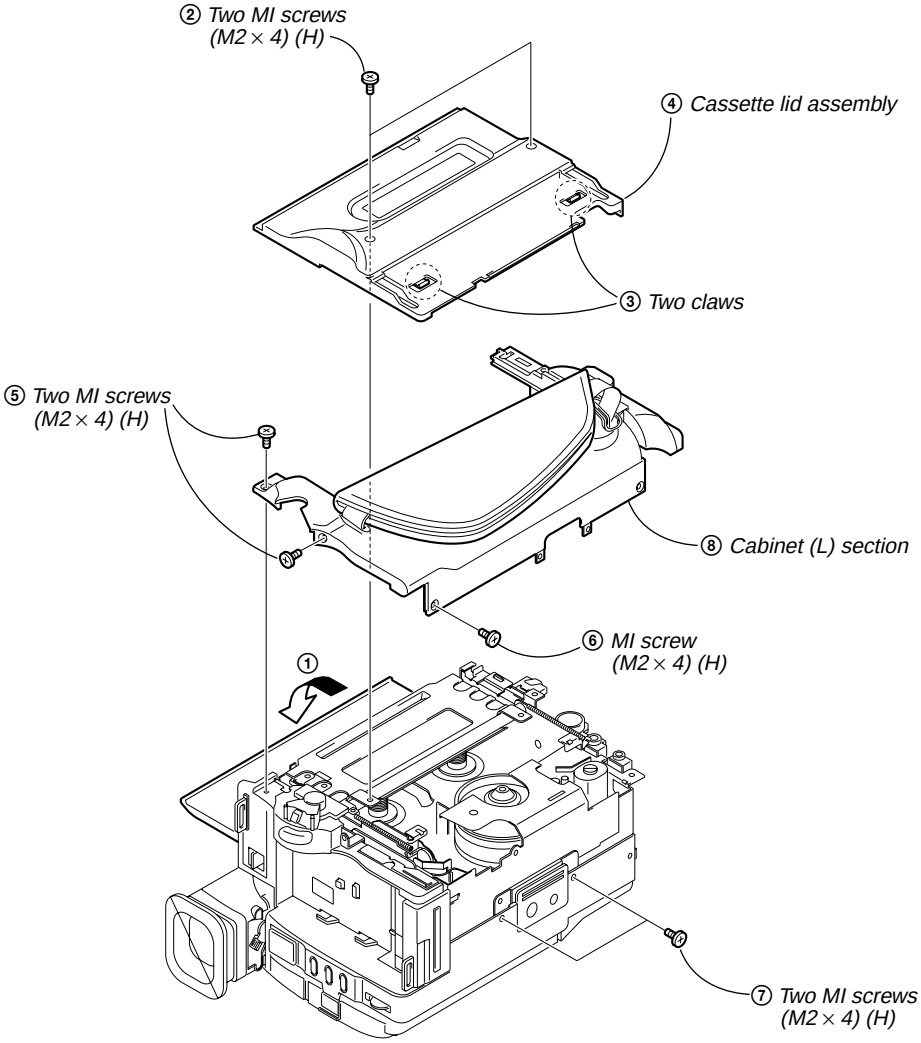


### *[MECHANISM DECK SERVICE POSITION]*

***Note:*** *Use the parts only which can be removed easily from outside of the mechanism deck.*

- ***How to move up the cassette compartment manually***

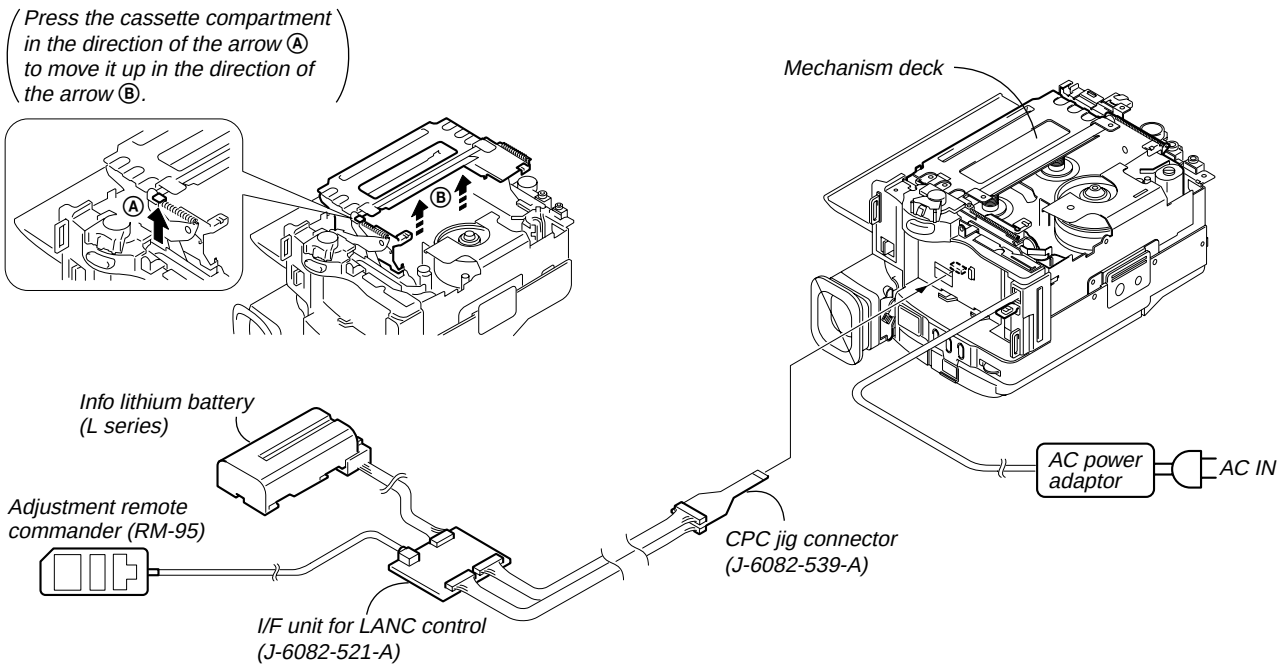

## 2-7. CABINET (R) SECTION

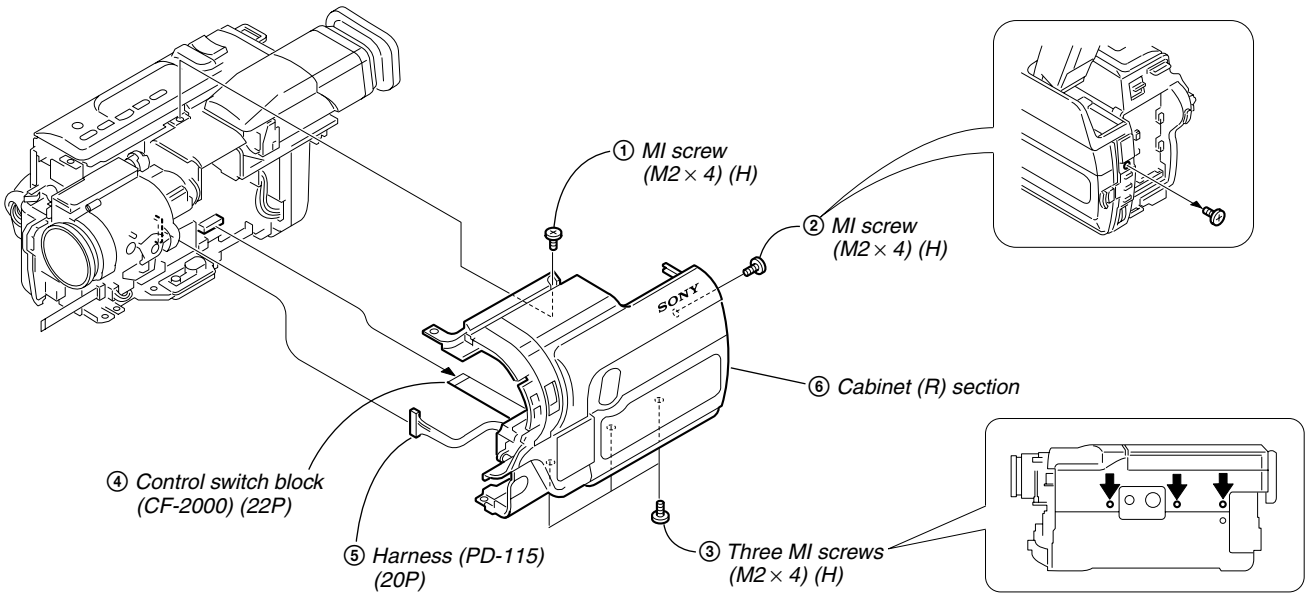


## 2-8. EVF SECTION

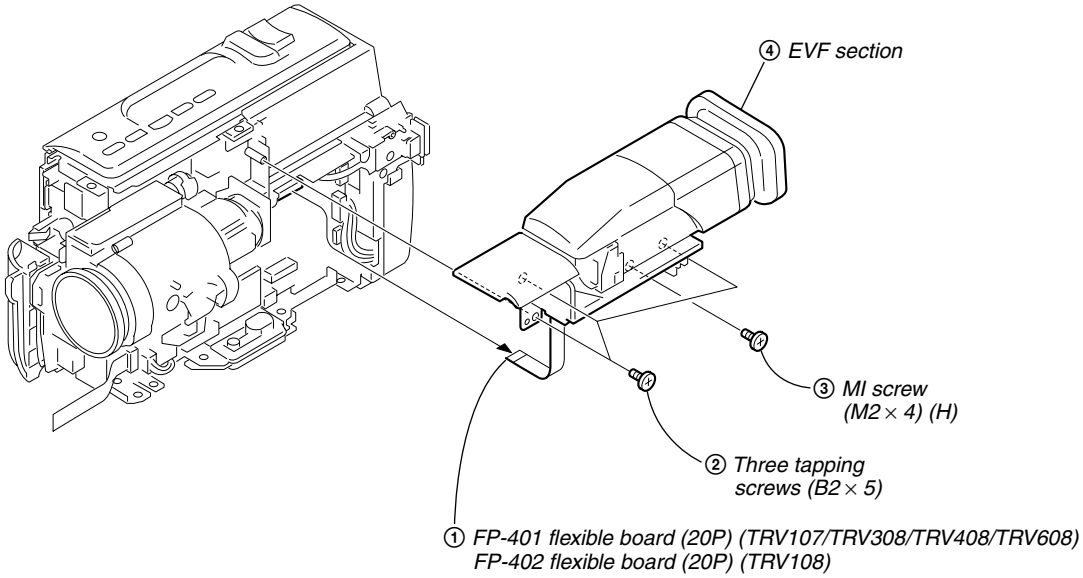

## 2-9. BATTERY PANEL SECTION

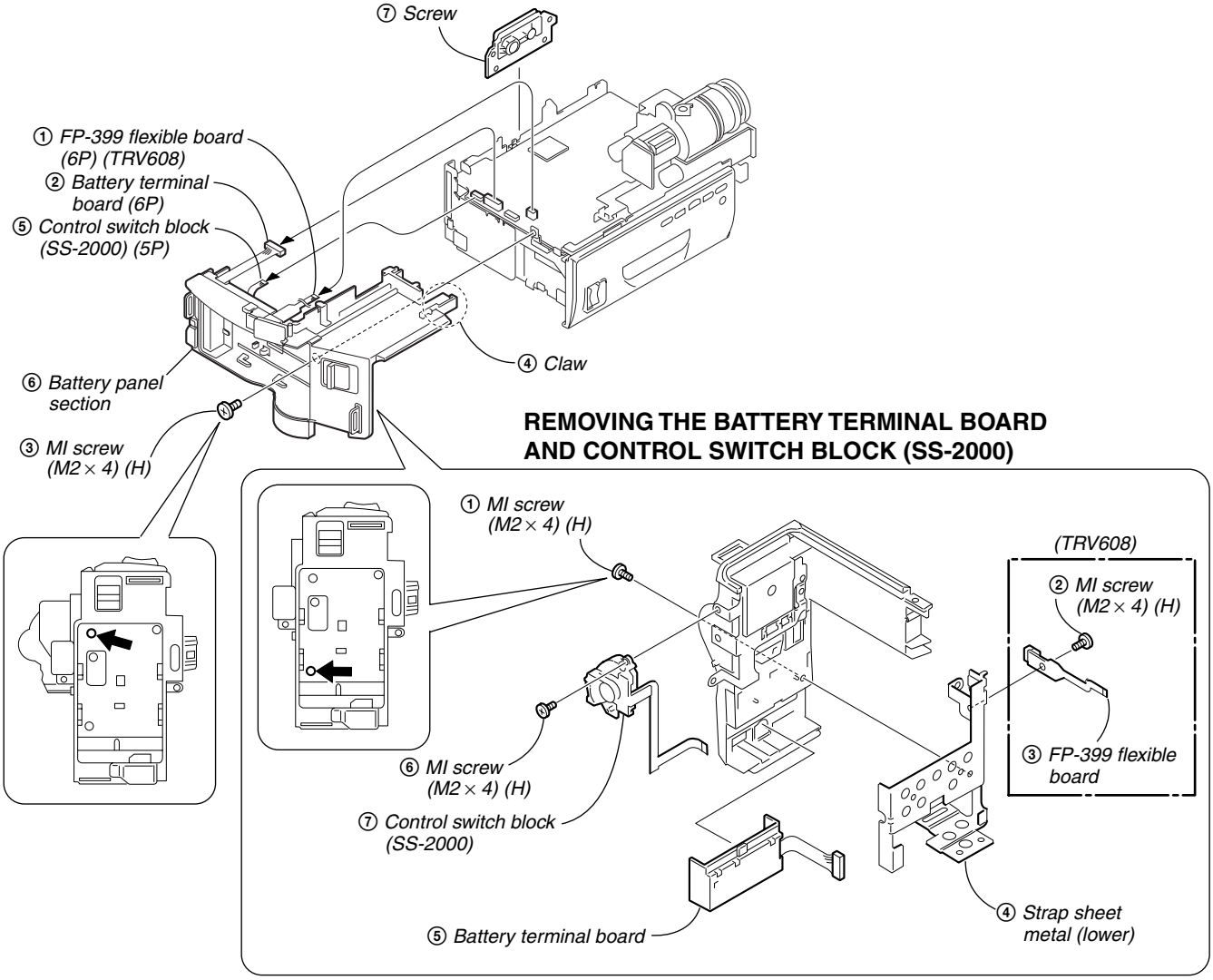


## 2-10. LENS SECTION

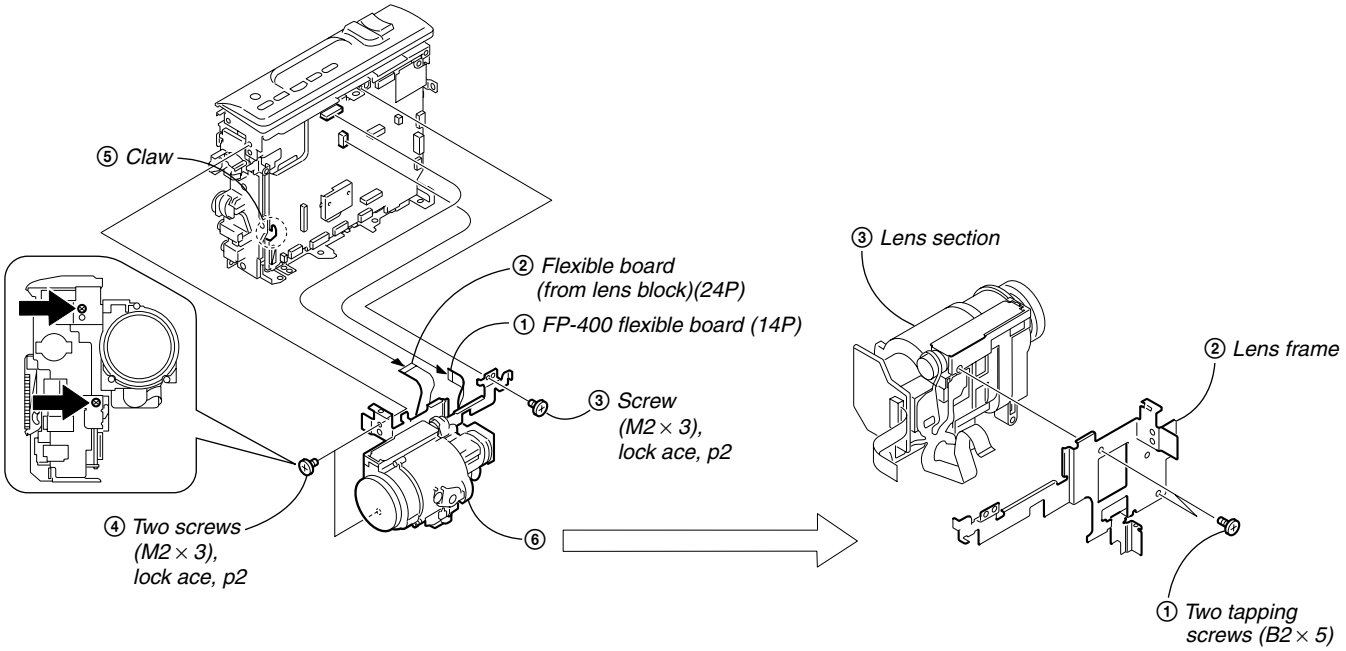

## 2-11. VC-272 BOARD

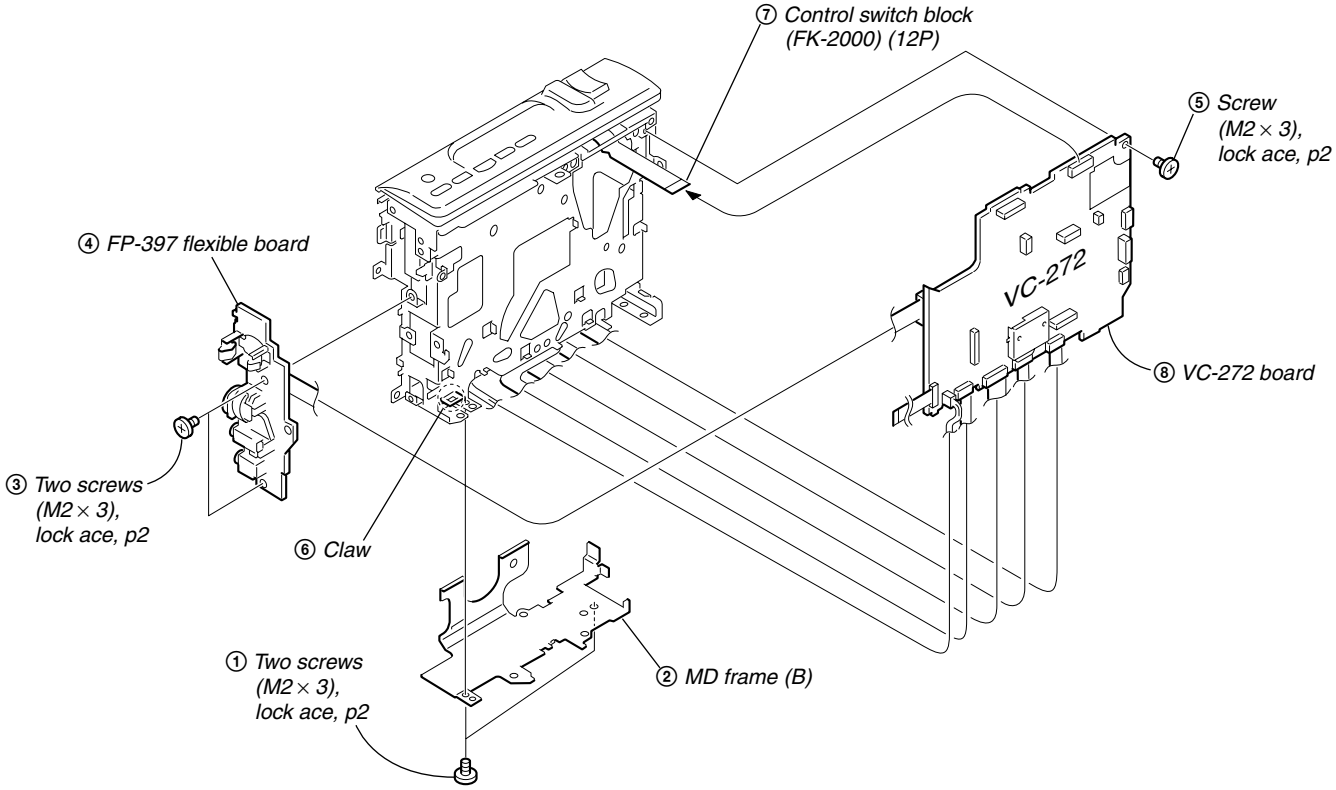


## 2-12. CONTROL SWITCH BLOCK (CF-2000)

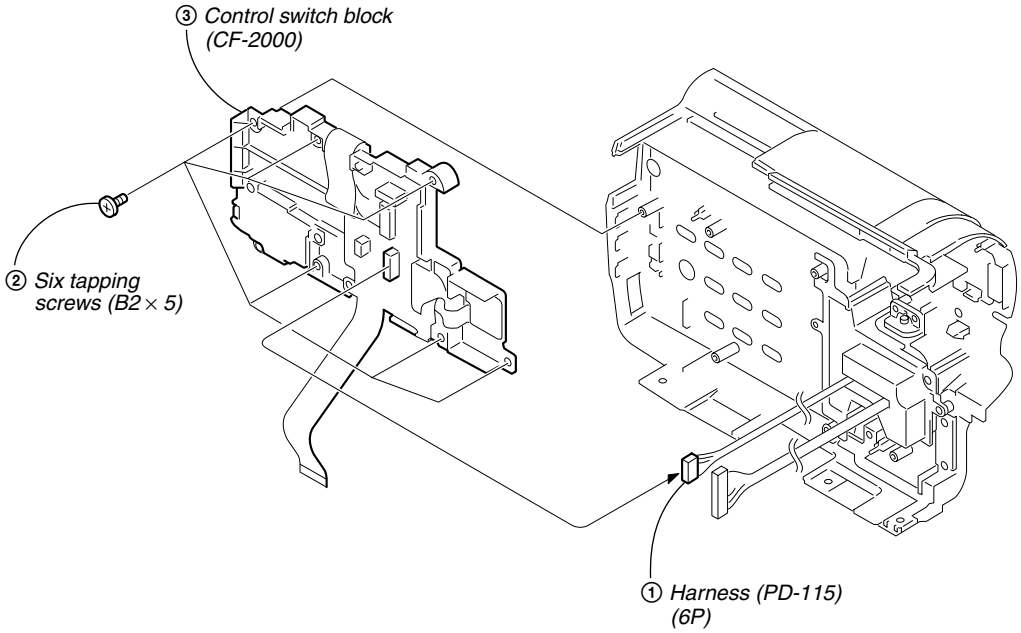

## *[SERVICE POSITION TO CHECK THE VTR SECTION]*

### Connection to Check the VTR Section

To check the VTR section, set the VTR to the “Forced VTR power ON” mode.
Operate the VTR functions using the adjustment remote commander (with the HOLD switch set in the OFF position).

**Setting the “Forced VTR Power ON” mode**

1) Select page: 0, address: 01, and set data: 01.
2) Select page: D, address: 10, set data: 02, and press the PAUSE button of the adjustment remote commander.

**Exiting the “Forced VTR Power ON” mode**

1) Select page: 0, address: 01, and set data: 01.
2) Select page: D, address: 10, set data: 00, and press the PAUSE button of the adjustment remote commander.
3) Select page: 0, address: 01, and set data: 00.

**Note :** If the machine malfunctions (the operating mode changes by itself), connect the FK-2000 block, CF-2000 block.

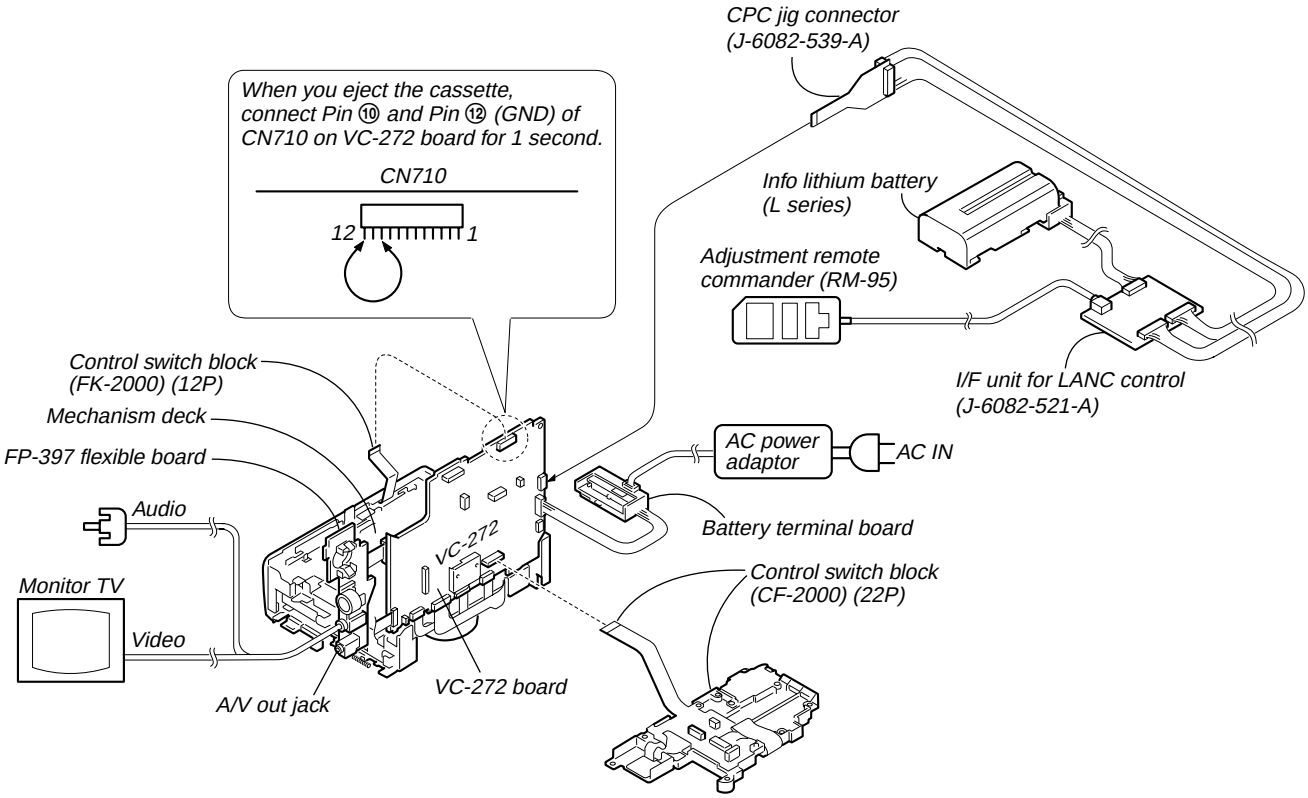

## *[SERVICE POSITION TO CHECK THE CAMERA SECTION]*

### Connection to Check the Camera Section

To check the camera section, set the camera to the “Forced camera power ON” mode.

**Setting the “Forced Camera Power ON” mode**

1) Select page: 0, address: 01, and set data: 01.
2) Select page: D, address: 10, set data: 01, and press the PAUSE button of the adjustment remote commander.

**Exiting the “Forced Camera Power ON” mode**

1) Select page: 0, address: 01, and set data: 01.
2) Select page: D, address: 10, set data: 00, and press the PAUSE button of the adjustment remote commander.
3) Select page: 0, address: 01, and set data: 00.

**Note :** If the machine malfunctions (the operating mode changes by itself), connect the FK-2000 block, CF-2000 block.

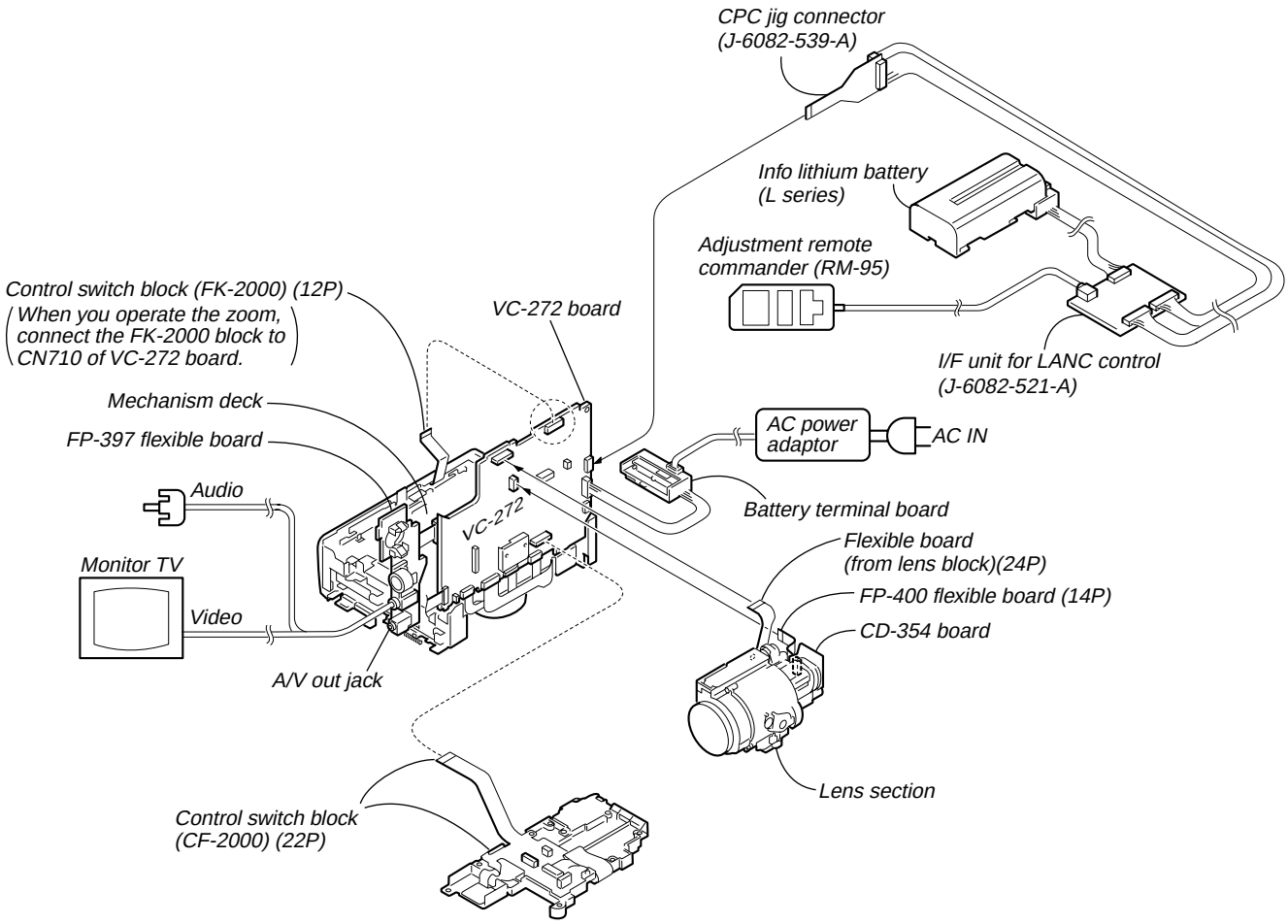

## 2-13. MECHANISM DECK

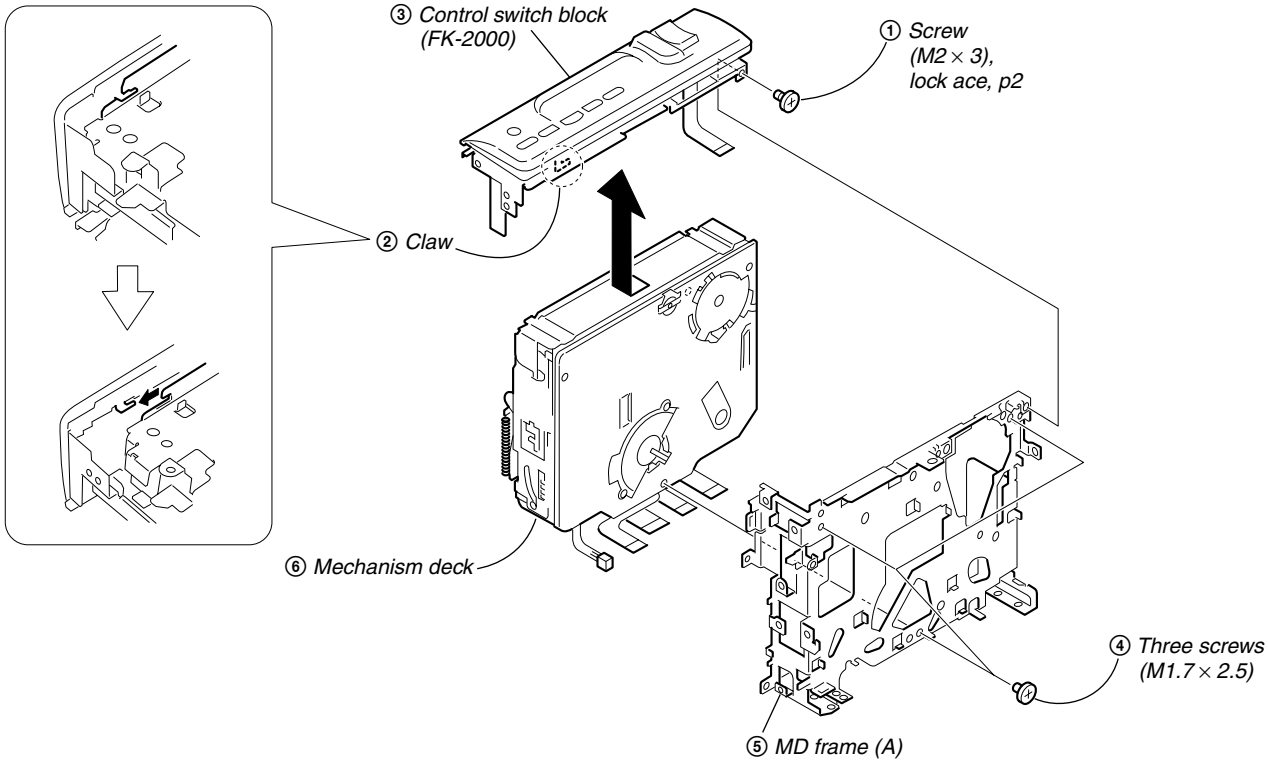


## 2-14. HINGE ASSEMBLY

(Remove the LCD unit reffering to section 2-2 before starting disassembly.)

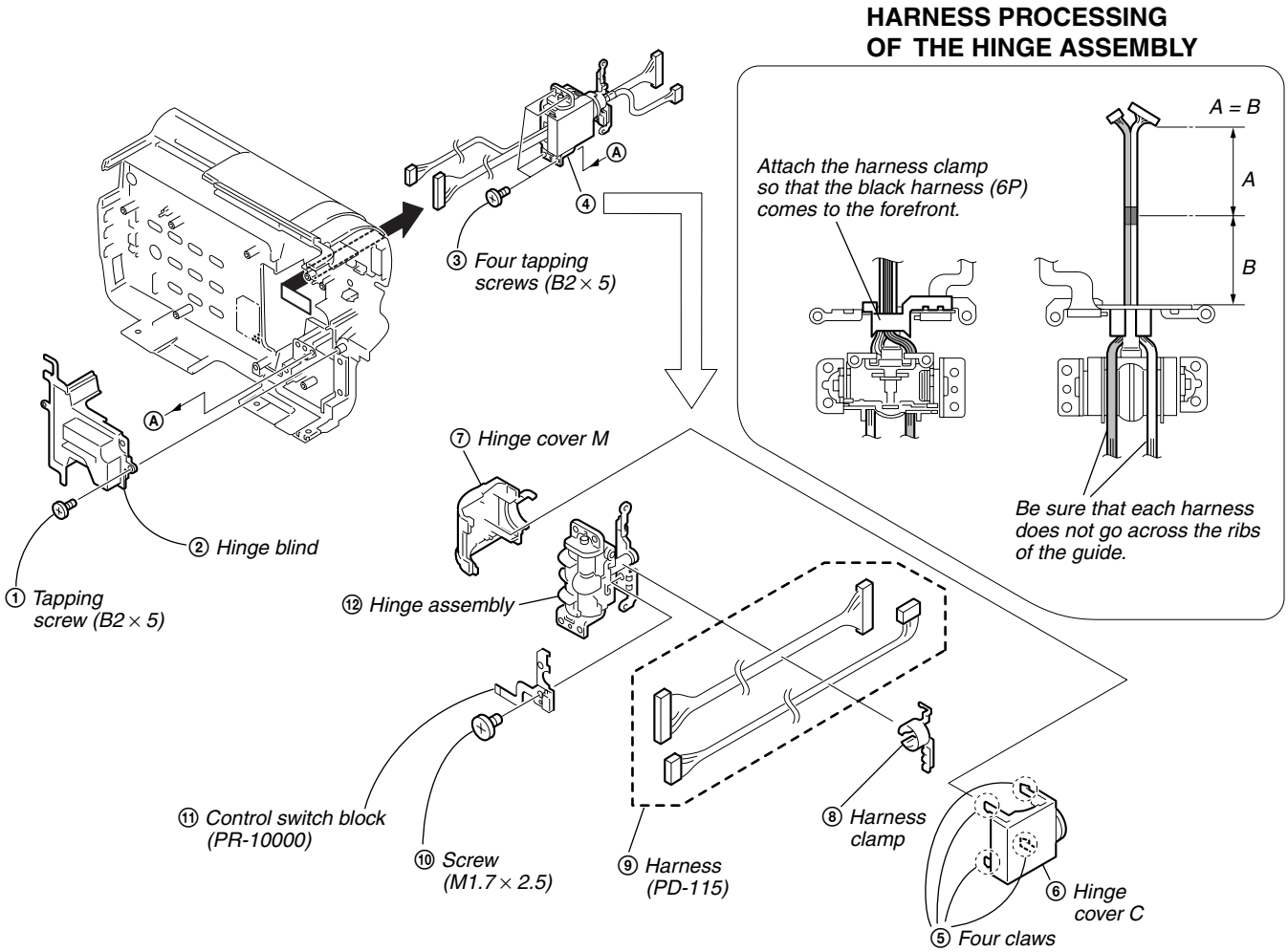

## 2-15. CIRCUIT BOARDS LOCATION

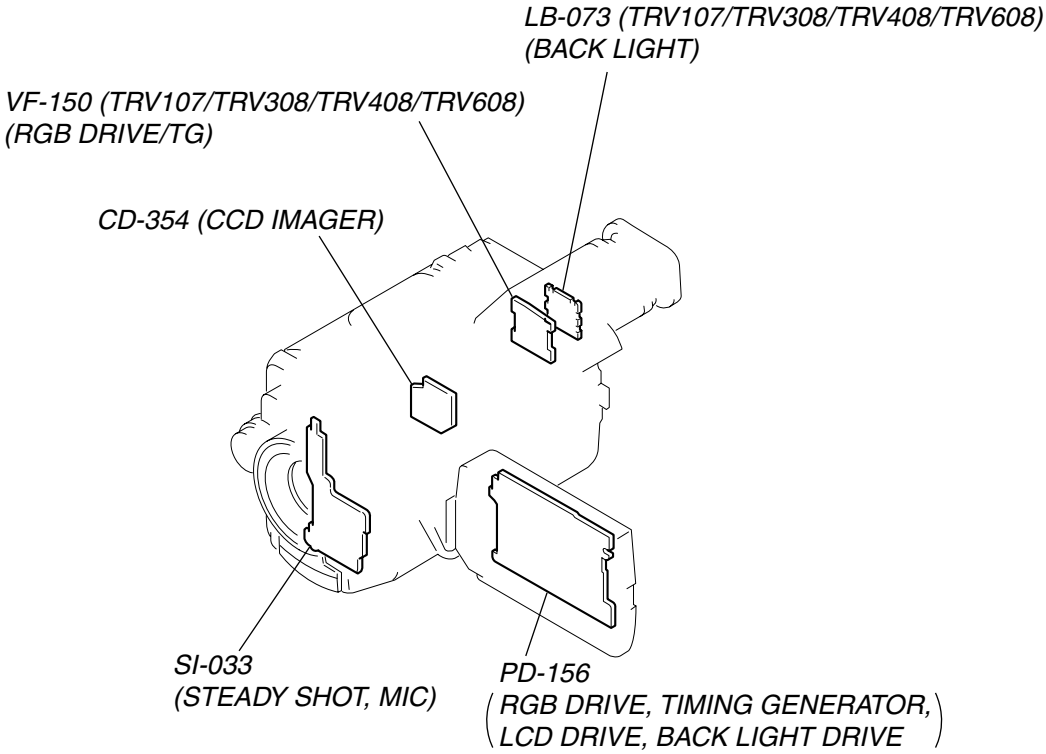


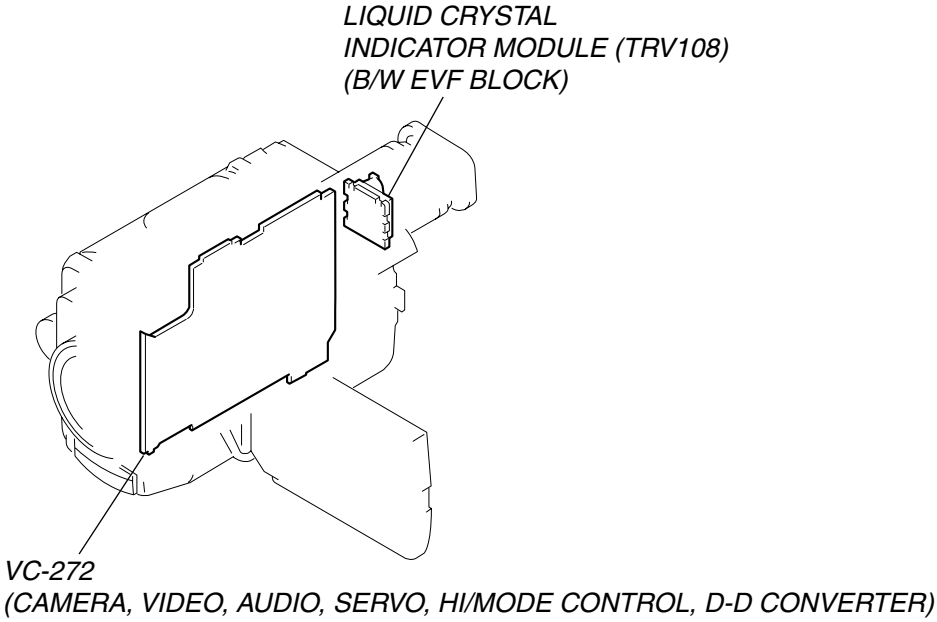

## 2-16. FLEXIBLE BOARDS LOCATION

The flexible boards contained in the mechanism deck are not shown.

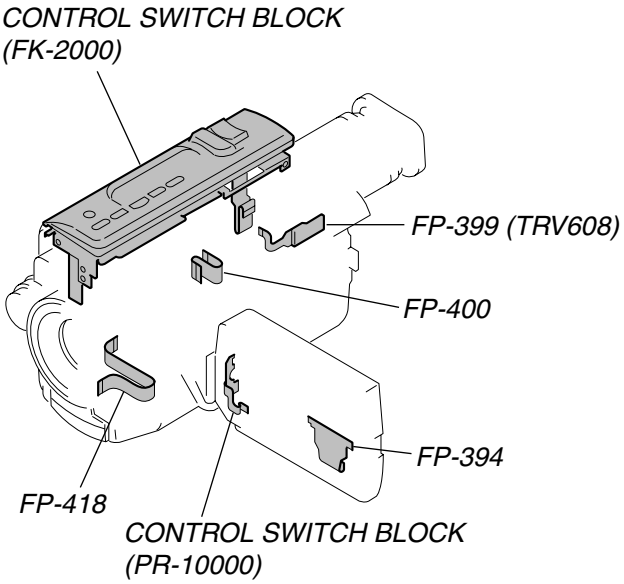


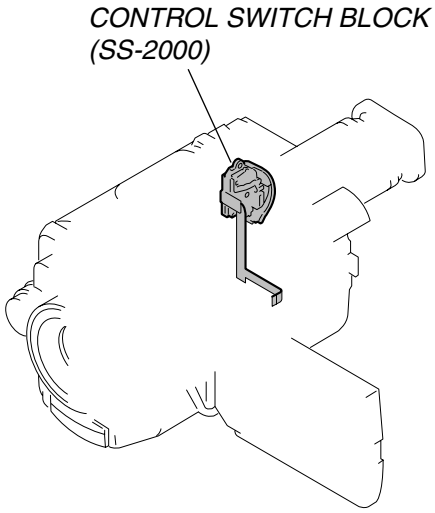


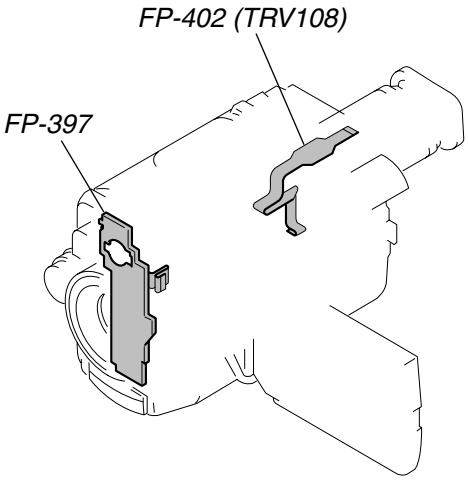


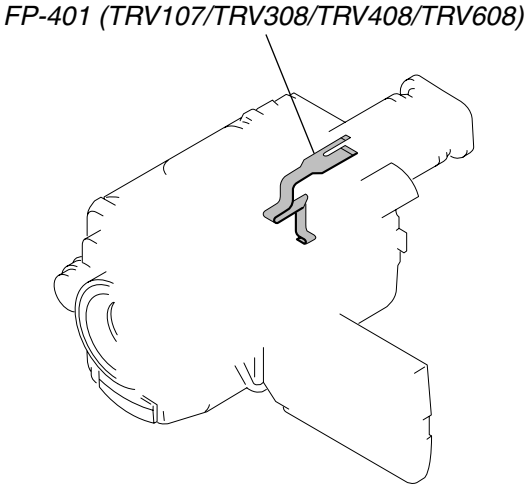


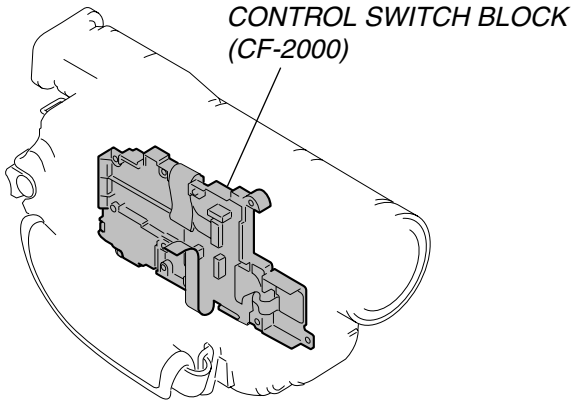

# SECTION 3
# BLOCK DIAGRAMS

## 3-1. OVERALL BLOCK DIAGRAM (1/2)

( ) : Page No. shown in ( ) indicates the page to refer on the schematic diagram.

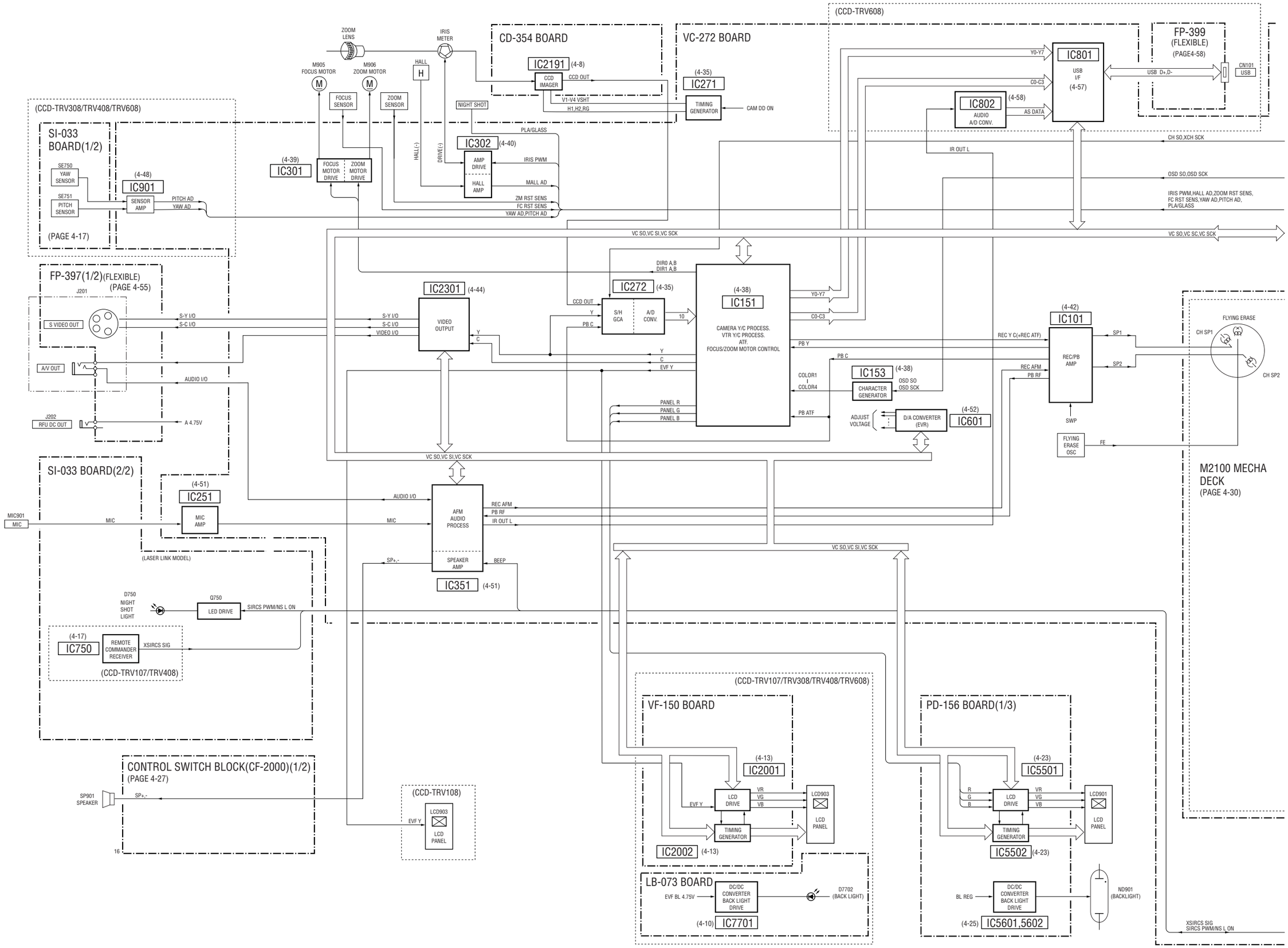

## 3-2. OVERALL BLOCK DIAGRAM (2/2)

( ) : Page No. shown in ( ) indicates the page to refer on the schematic diagram.

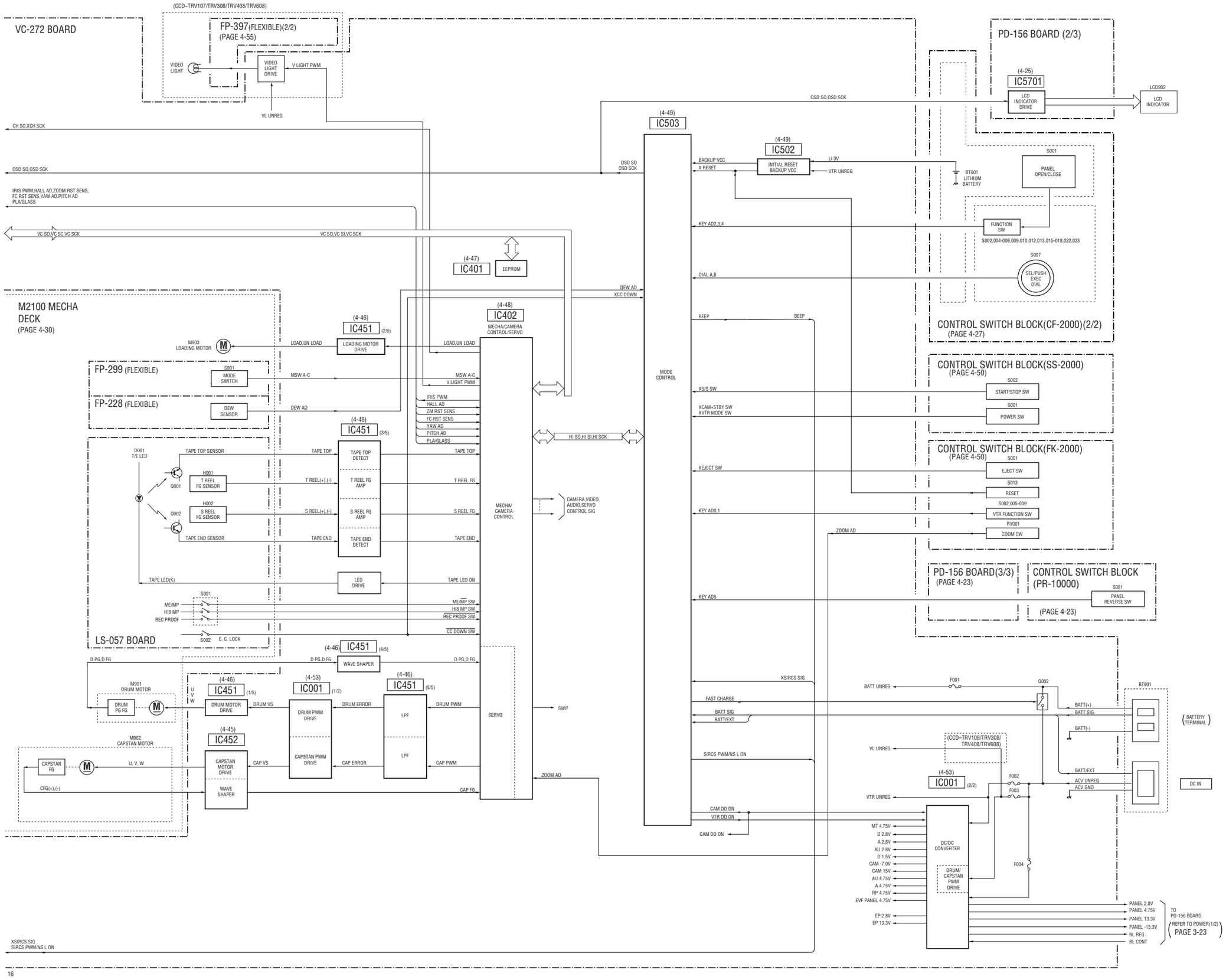

## 3-3. CAMERA/VIDEO BLOCK DIAGRAM (1/2)

( ) : Page No. shown in ( ) indicates the page to refer on the schematic diagram.

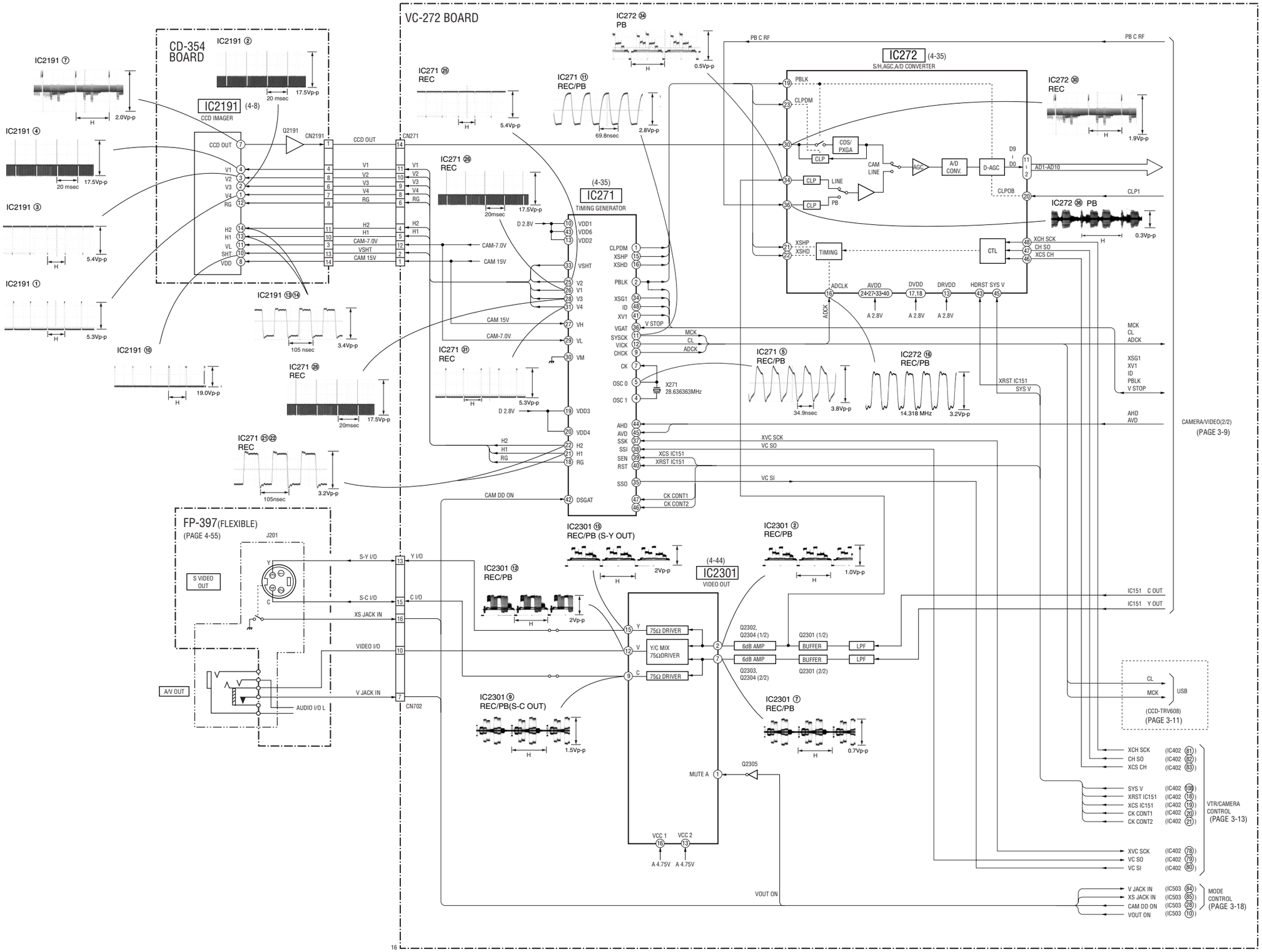

## 3-4. CAMERA/VIDEO BLOCK DIAGRAM (2/2)

( ) : Page No. shown in ( ) indicates the page to refer on the schematic diagram.

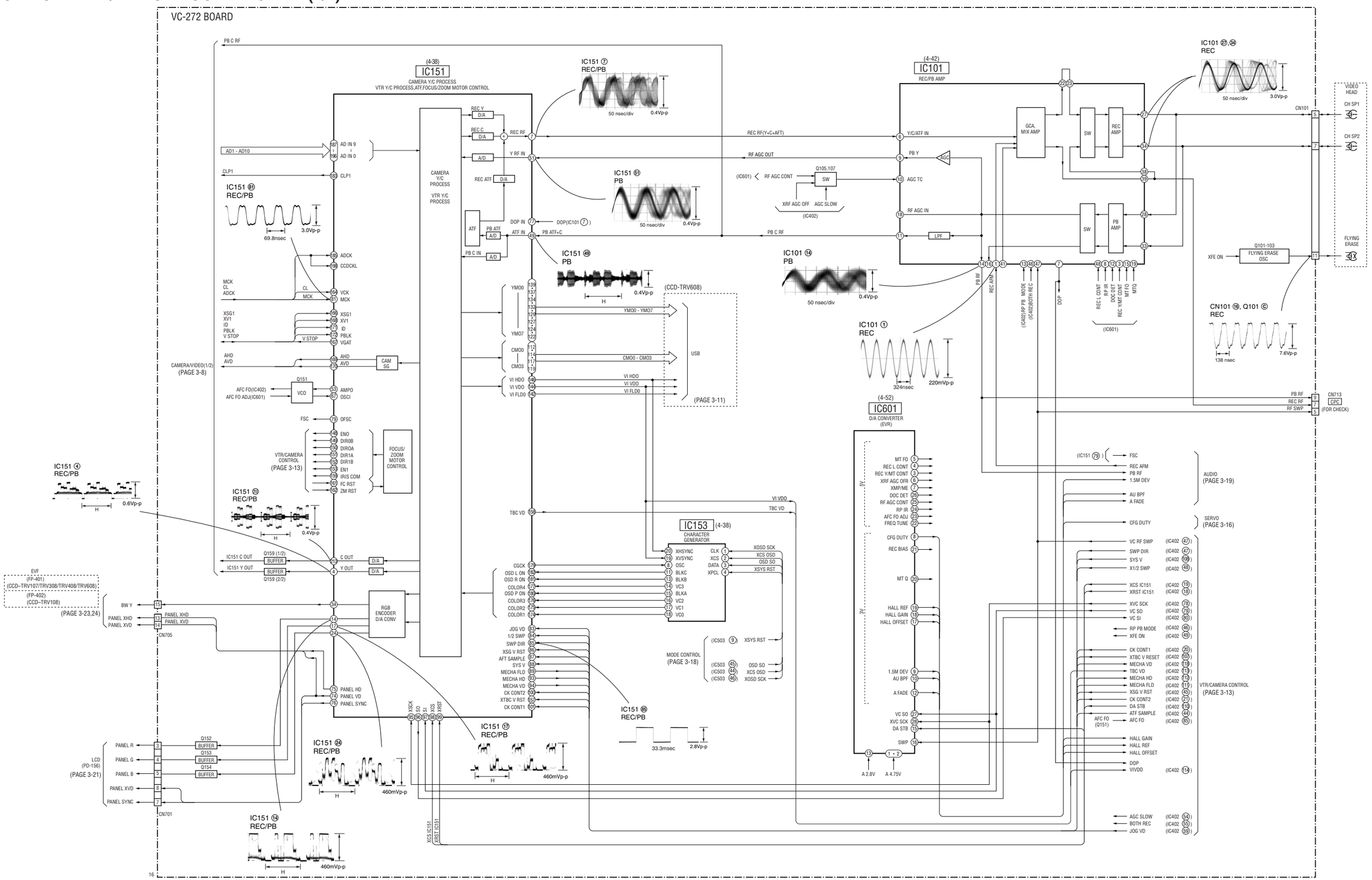

## 3-5. USB BLOCK DIAGRAM

( ) : Page No. shown in ( ) indicates the page to refer on the schematic diagram.

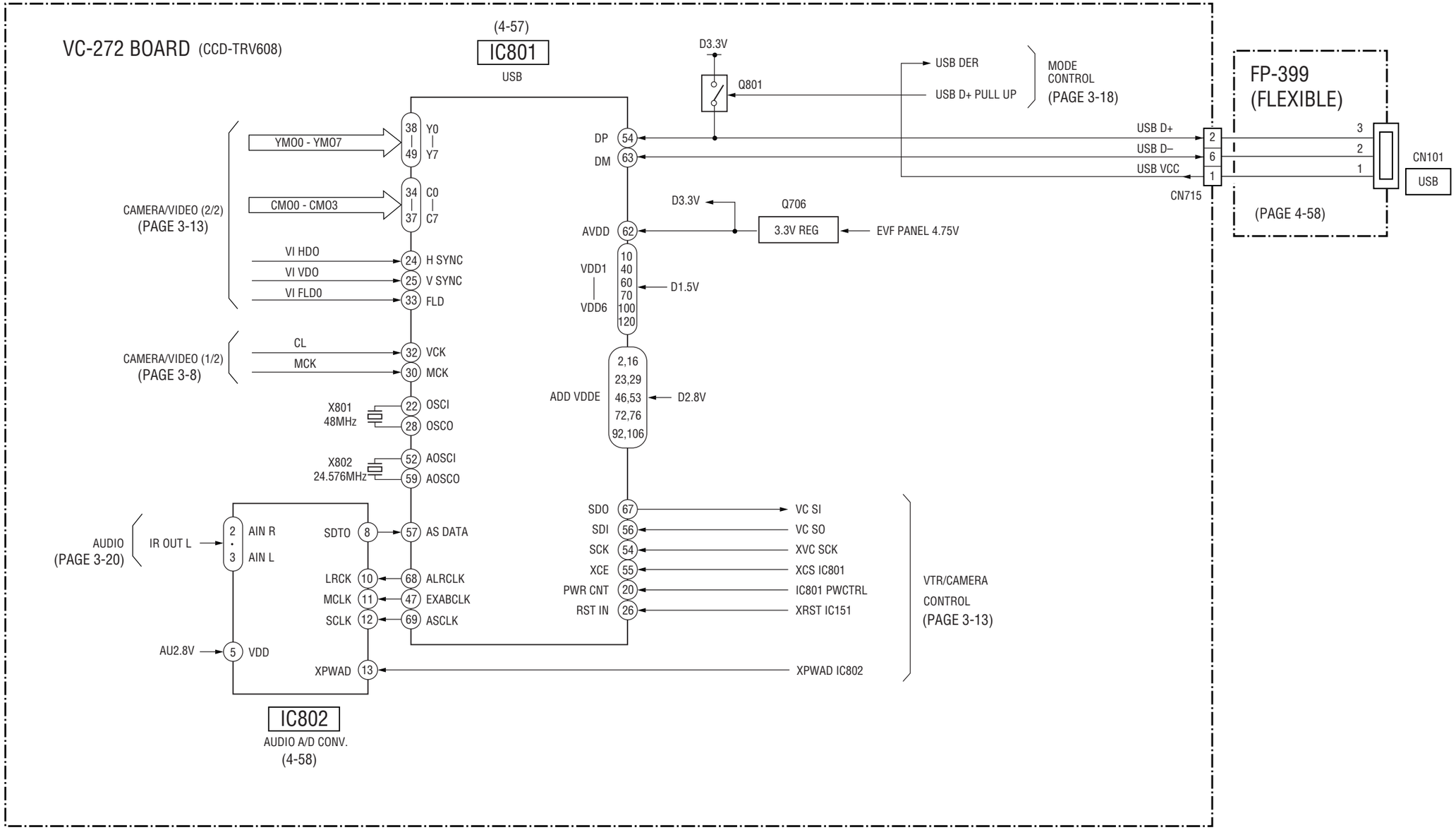

## 3-6. VTR/CAMERA CONTROL BLOCK DIAGRAM

( ) : Page No. shown in ( ) indicates the page to refer on the schematic diagram.

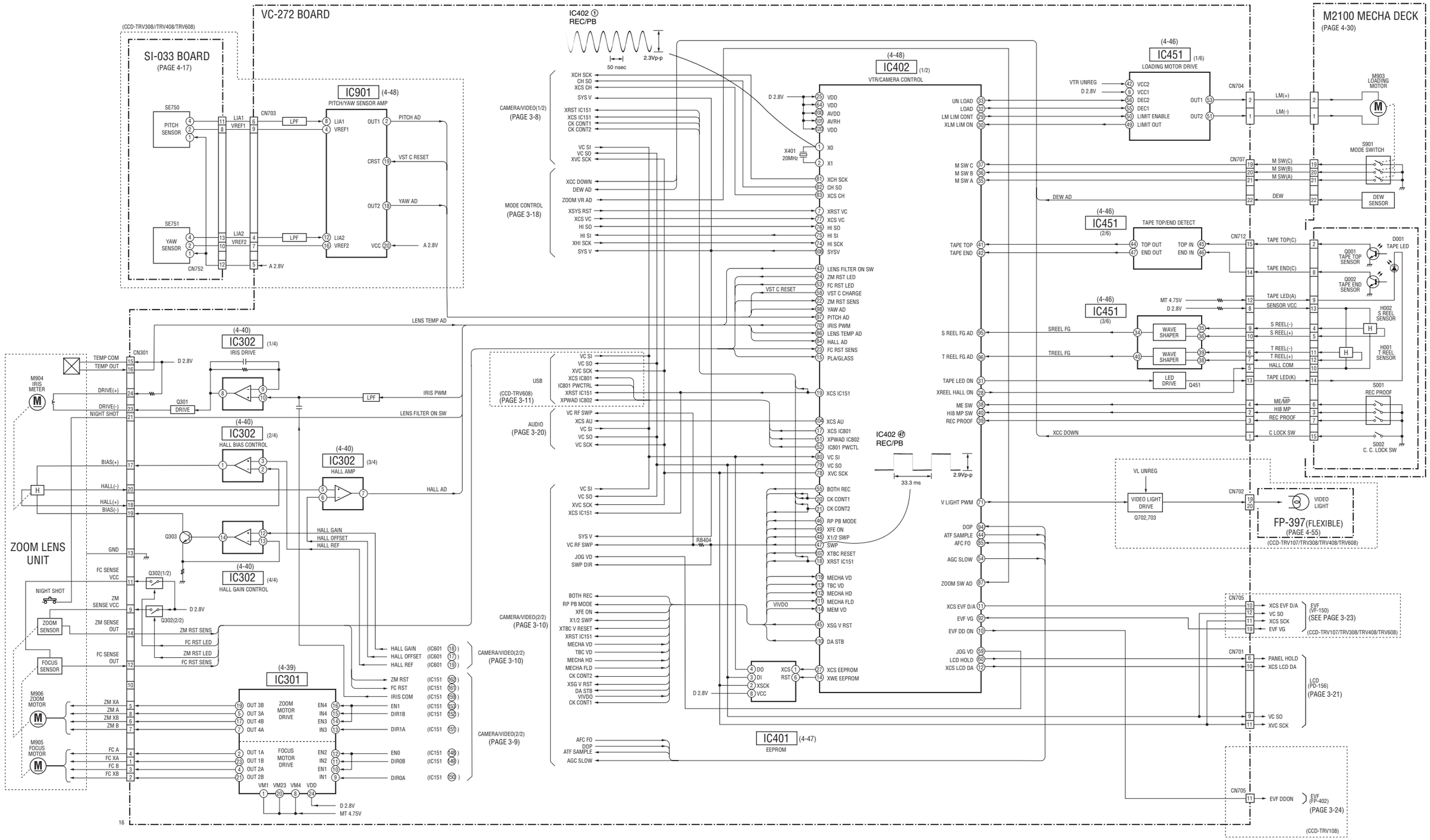

## 3-7. SERVO BLOCK DIAGRAM

( ) : Page No. shown in ( ) indicates the page to refer on the schematic diagram.

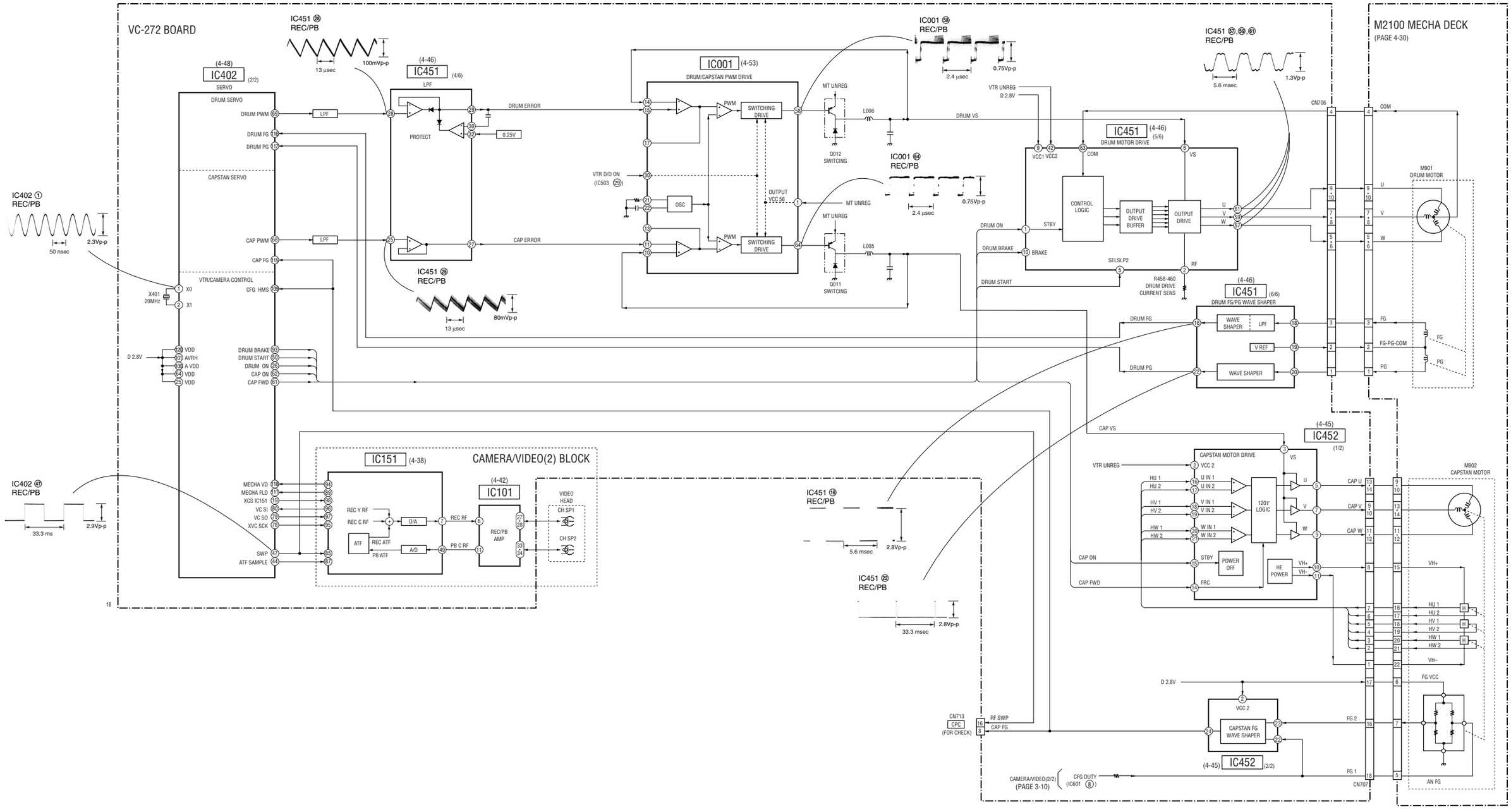

## 3-8. MODE CONTROL BLOCK DIAGRAM

( ) : Page No. shown in ( ) indicates the page to refer on the schematic diagram.

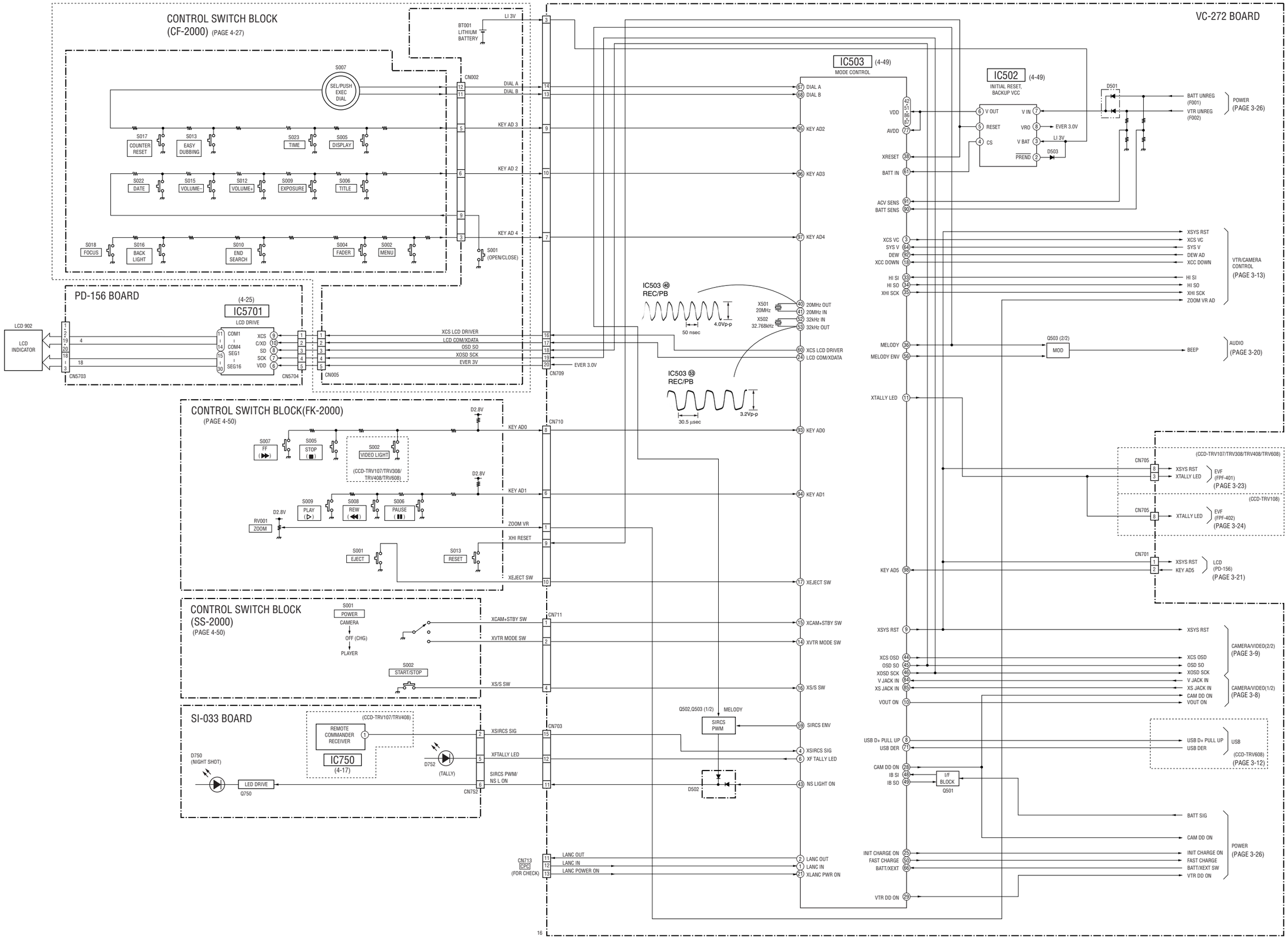

## 3-9. AUDIO BLOCK DIAGRAM

( ) : Page No. shown in ( ) indicates the page to refer on the schematic diagram.

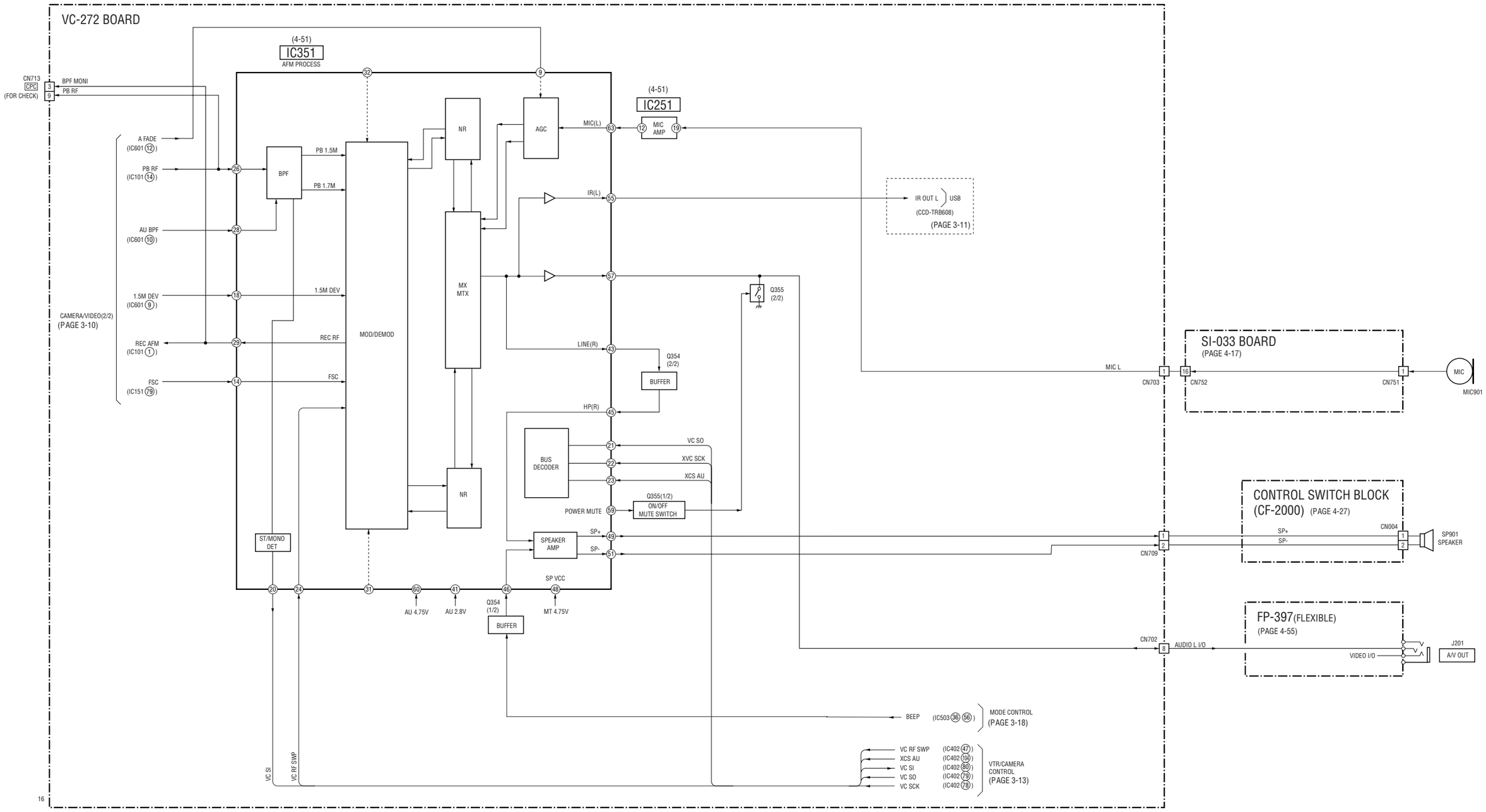

## 3-10. LCD BLOCK DIAGRAM

( ) : Page No. shown in ( ) indicates the page to refer on the schematic diagram.

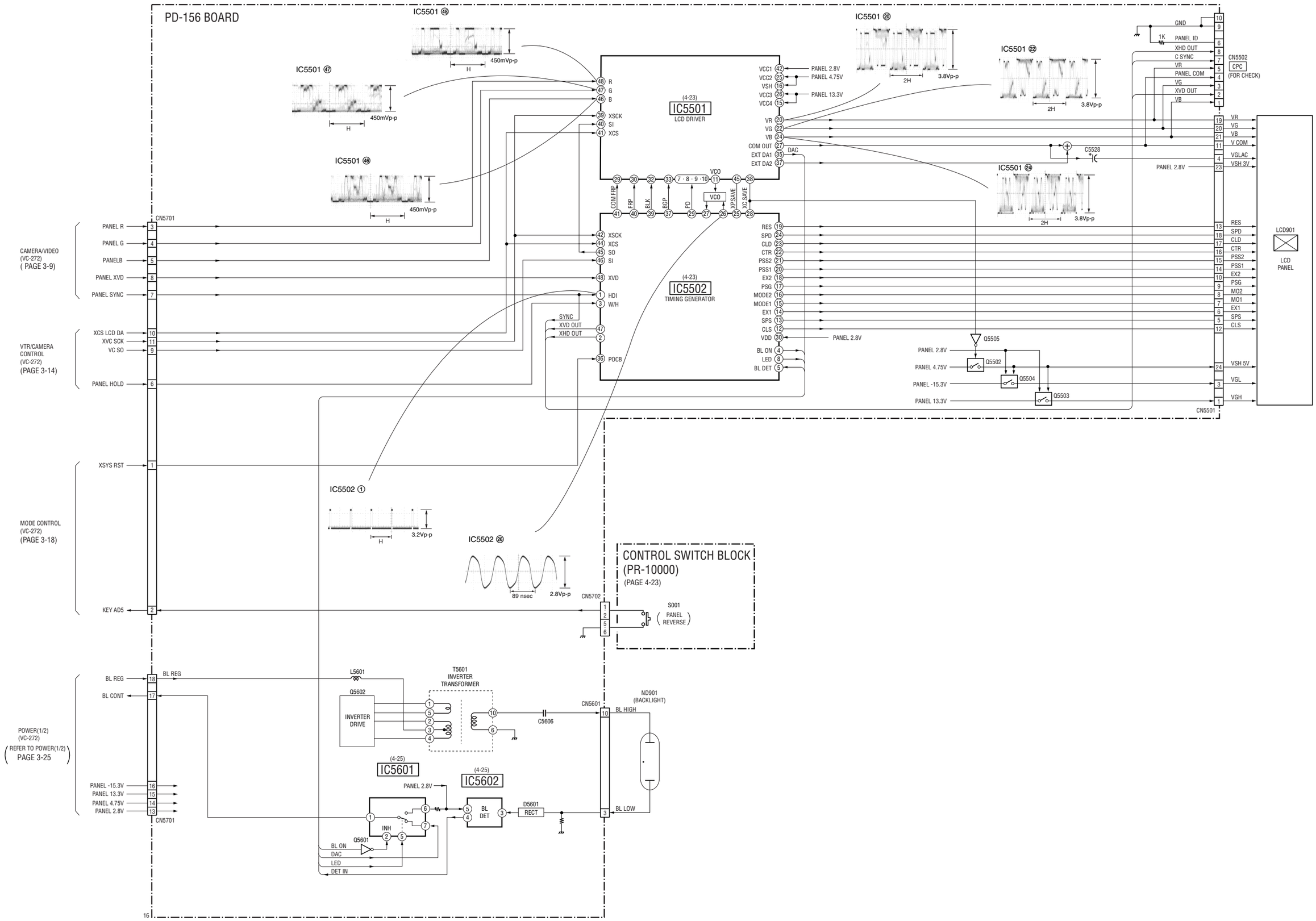

## 3-11. EVF BLOCK DIAGRAM

( ) : Page No. shown in ( ) indicates the page to refer on the schematic diagram.

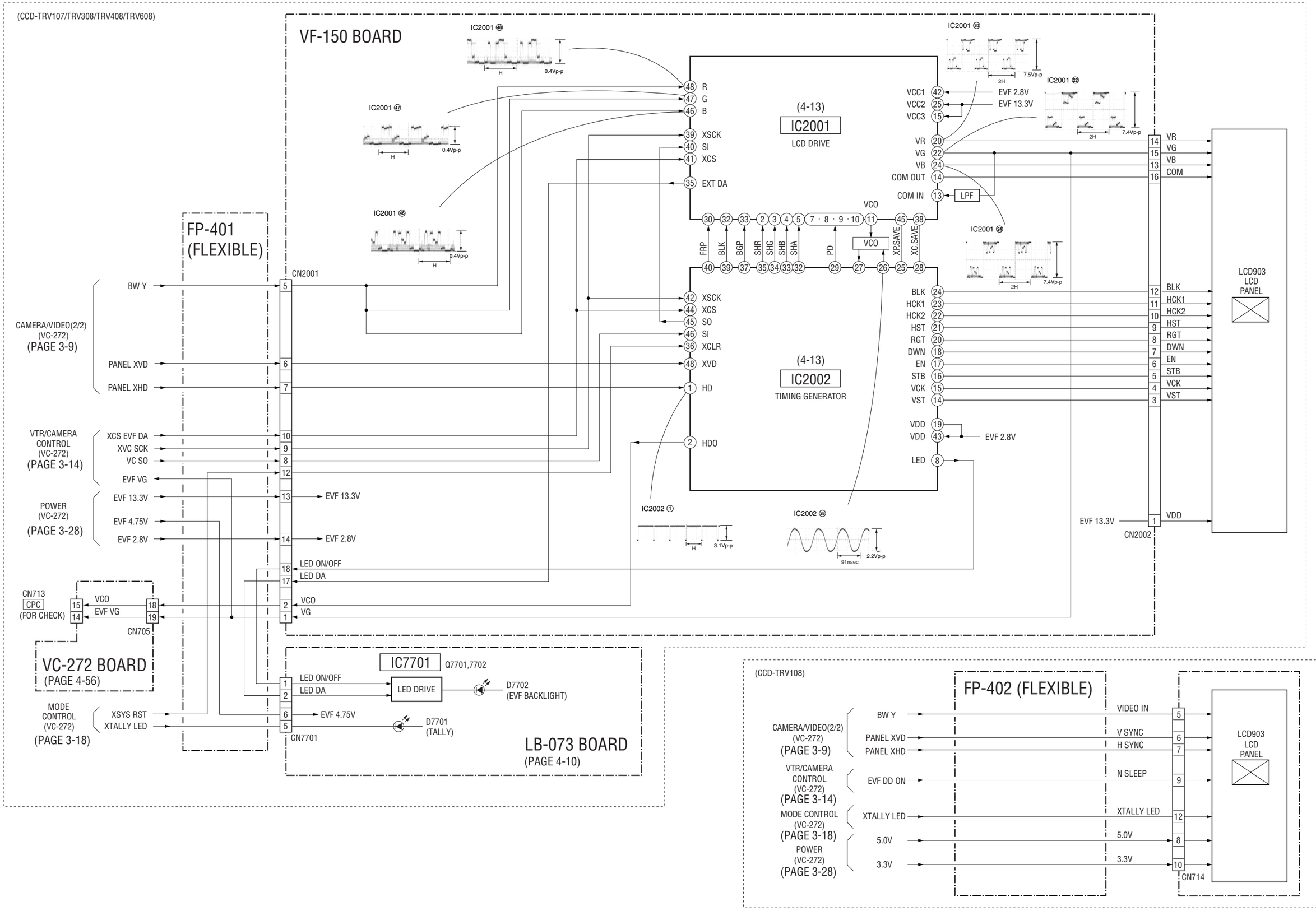

## 3-12. POWER BLOCK DIAGRAM (1/2)

( ) : Page No. shown in ( ) indicates the page to refer on the schematic diagram.

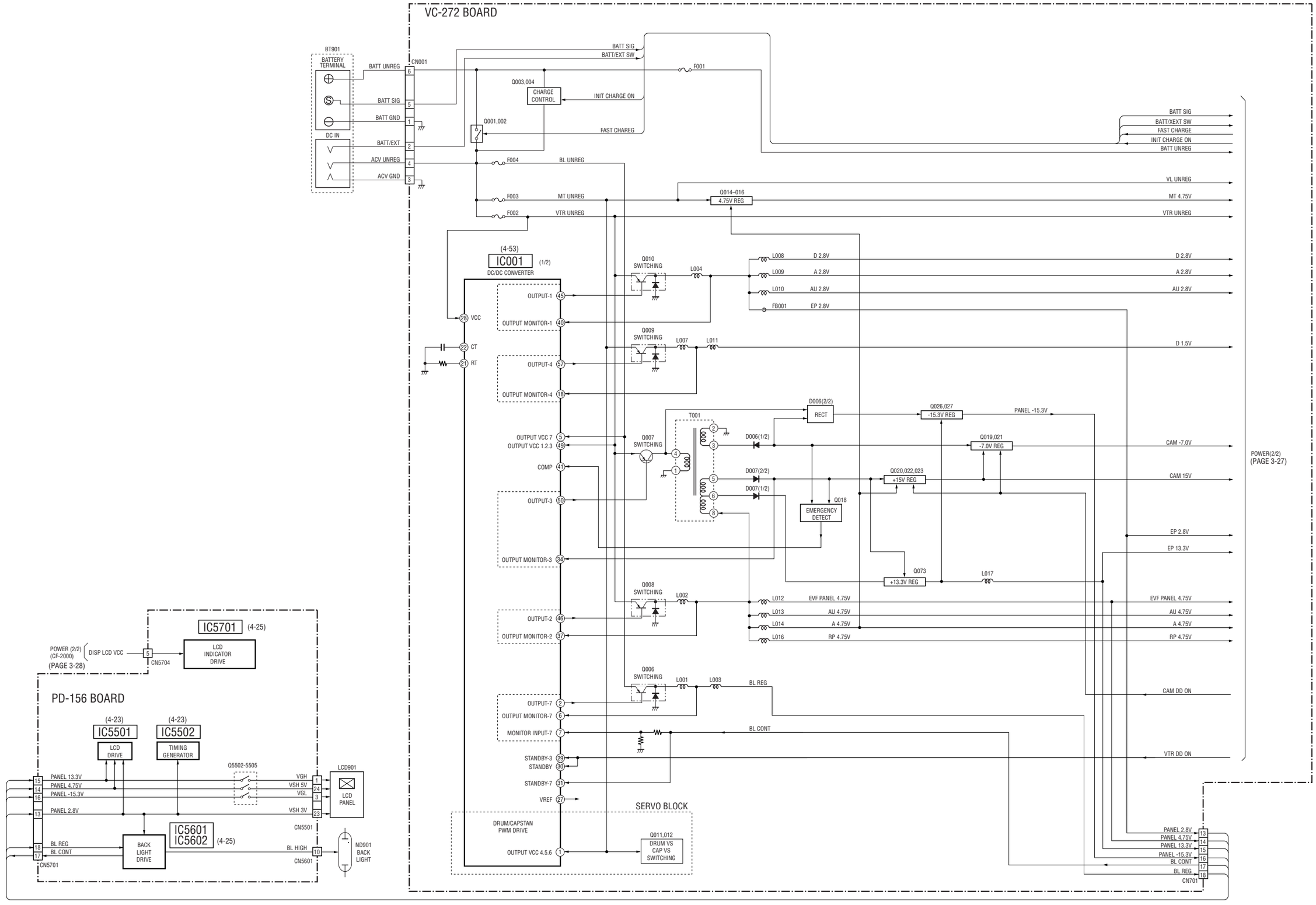

## 3-13. POWER BLOCK DIAGRAM (2/2)

( ) : Page No. shown in ( ) indicates the page to refer on the schematic diagram.

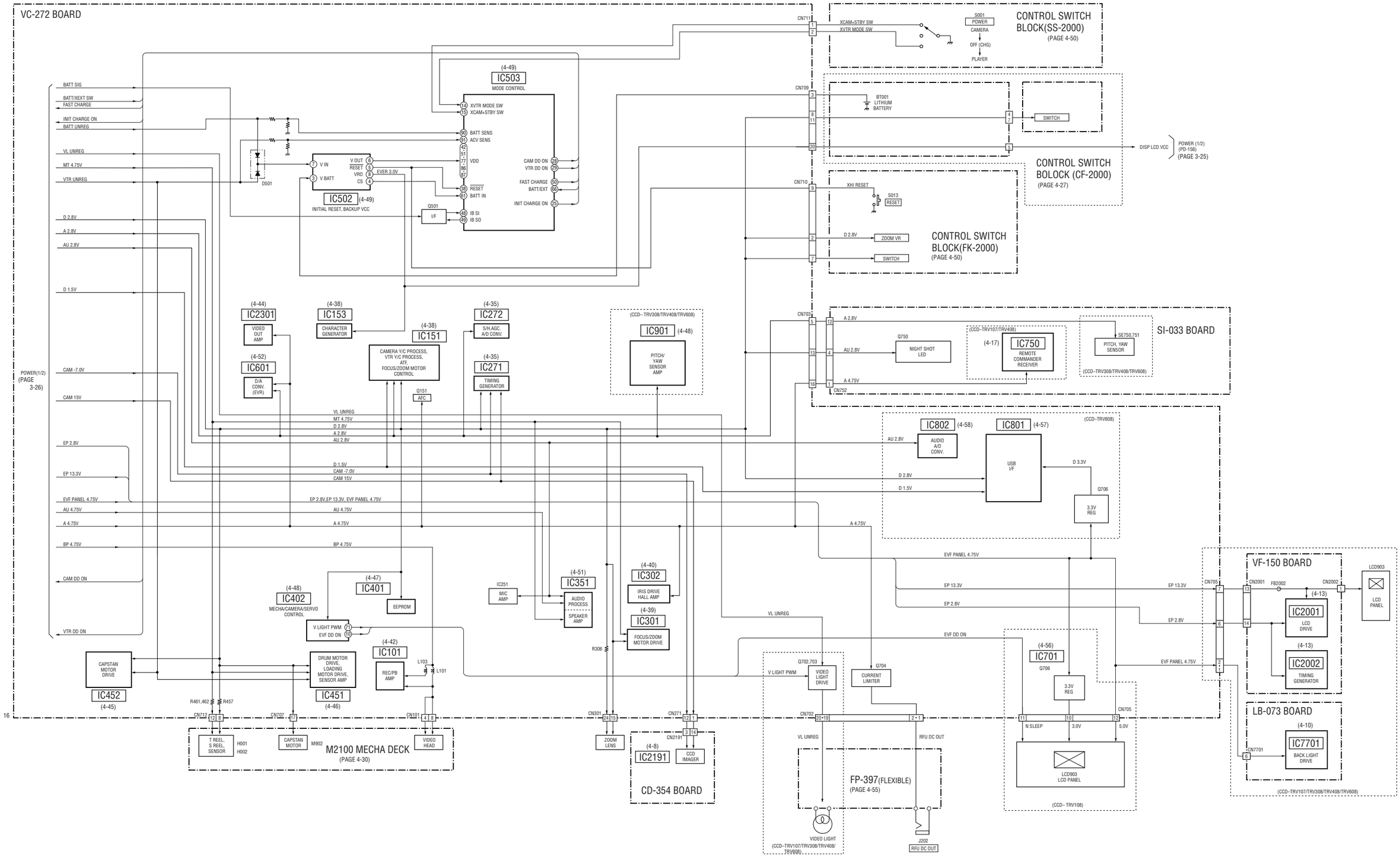

# SECTION 4
# PRINTED WIRING BOARDS AND SCHEMATIC DIAGRAMS

## 4-1. FRAME SCHEMATIC DIAGRAM (1/2)

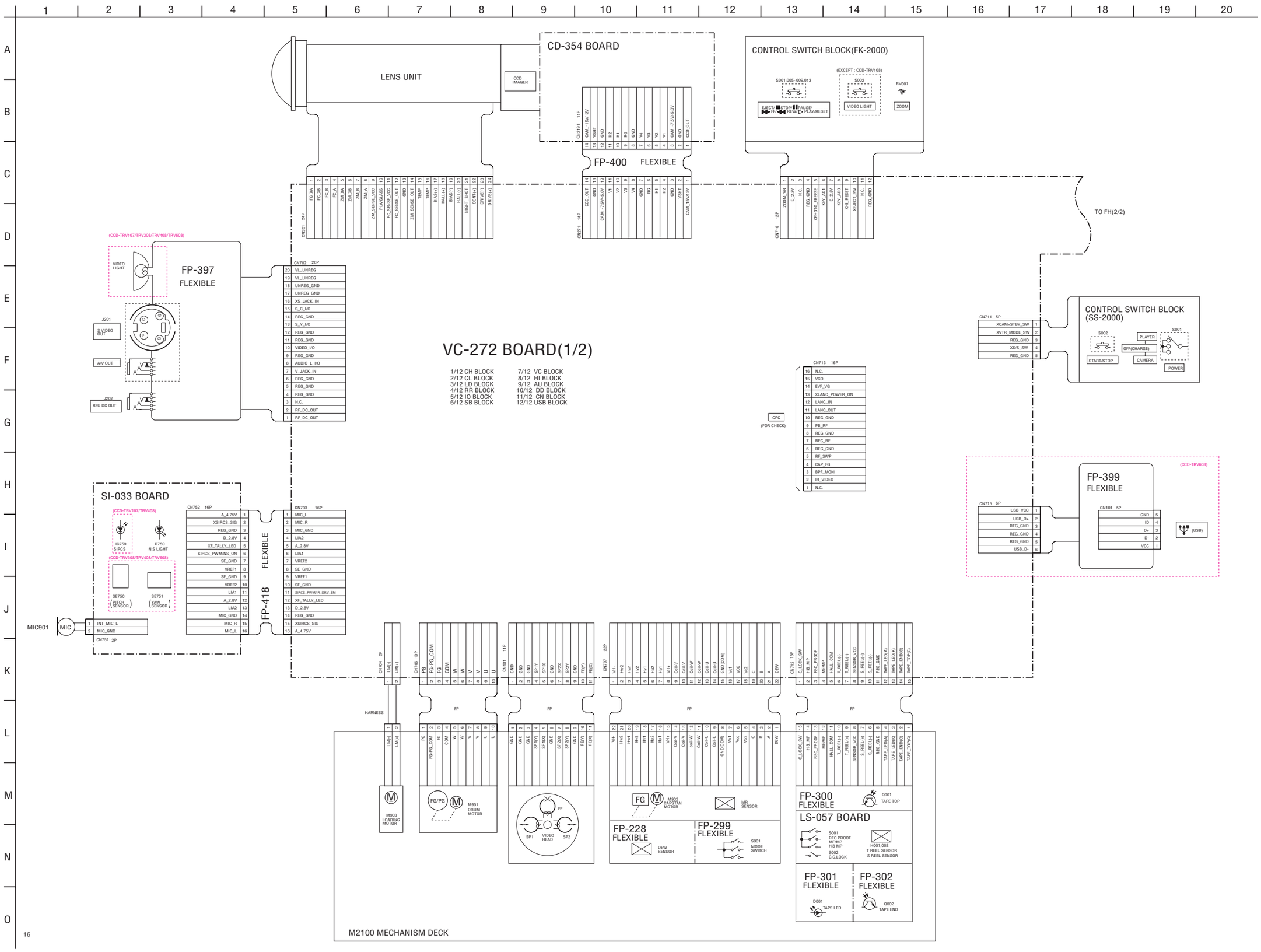

## FRAME SCHEMATIC DIAGRAM (2/2)

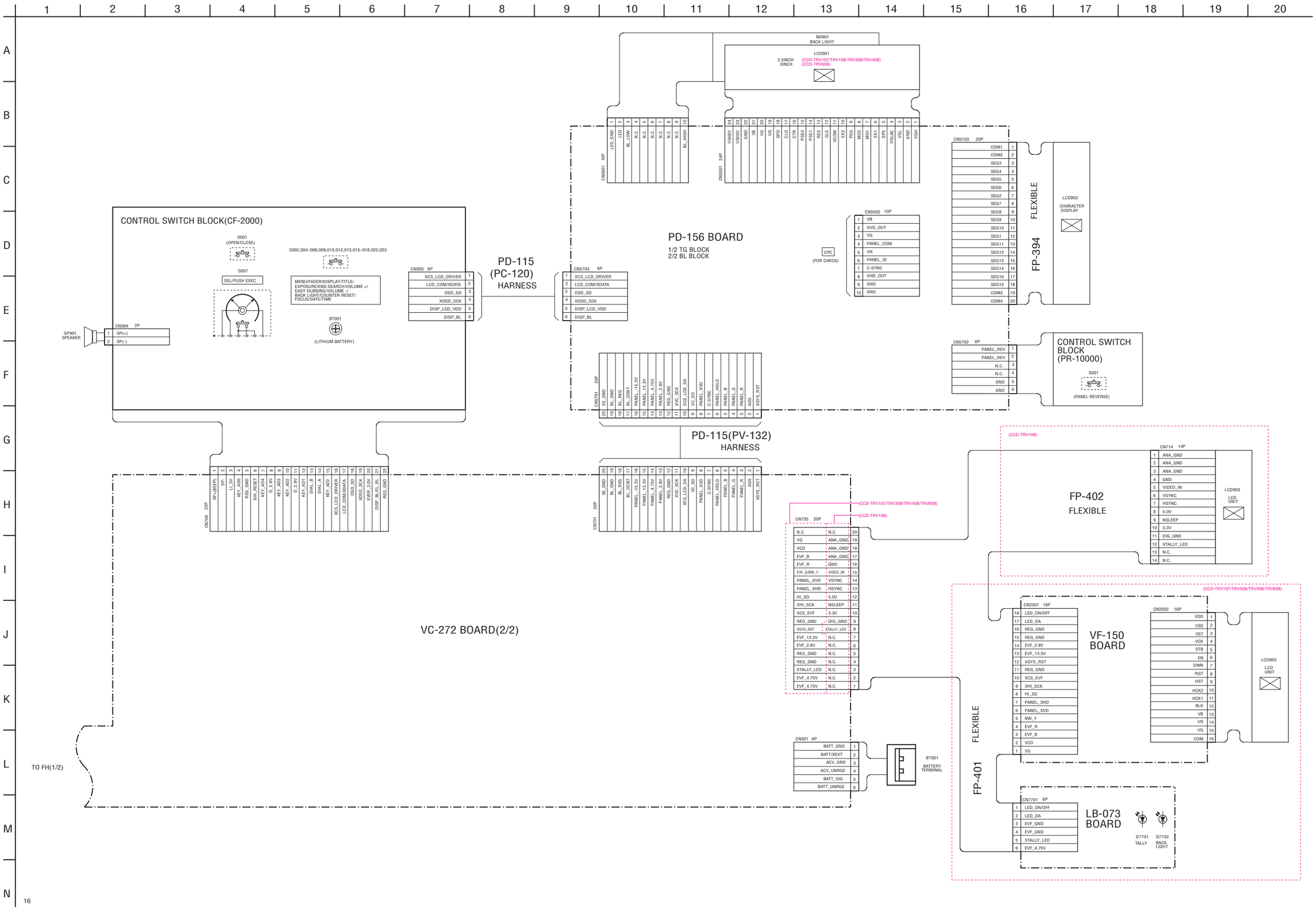

## 4-2. PRINTED WIRING BOARDS AND SCHEMATIC DIAGRAMS

**THIS NOTE IS COMMON FOR WIRING BOARDS AND SCHEMATIC DIAGRAMS**
**(In addition to this, the necessary note is printed in each block)**

**(For printed wiring boards)**
- ▒▒▒▒: Pattern from the side which enables seeing.
  (The other layers' patterns are not indicated.)
- Through hole is omitted.
- Circled numbers refer to waveforms.
- There are few cases that the part printed on diagram isn't mounted in this model.
- Chip parts.

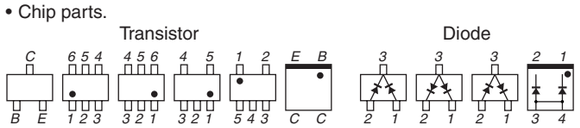


**(For schematic diagrams)**
- All capacitors are in μF unless otherwise noted. p: pF.
  50V or less are not indicated except for electrolytics and tantalums.
- Chip resistors are 1/10W unless otherwise noted.
  kΩ=1000Ω, MΩ=1000kΩ.
- Caution when replacing chip parts.
  New parts must be attached after removal of chip.
  Be careful not to heat the minus side of tantalum capacitor, Because it is damaged by the heat.
- Some chip part will be indicated as follows.

| Example | C541 | L452 |
|---|---|---|
| | 22U | 10UH |
| | TA A | 2520 |

Kinds of capacitor
Temperature characteristics
External dimensions (mm)

- Constants of resistors, capacitors, ICs and etc with XX indicate that they are not used.
  In such cases, the unused circuits may be indicated.
- All variable and adjustable resistors have characteristic curve B, unless otherwise noted.
- Signal name
  XEDIT → $\overline{\text{EDIT}}$ PB/XREC → PB/$\overline{\text{REC}}$
- : non flammable resistor
- : fusible resistor
- : panel designation
- : B+ Line *
- : B– Line *
- : IN/OUT direction of (+,–) B LINE. *
- : adjustment for repair. *
- Circled numbers refer to waveforms. *

* Indicated by the color red.

| Note : | Note : |
|---|---|
| The components identified by mark ⚠ or dotted line with mark ⚠ are critical for safety. Replace only with part number specified. | Les composants identifiés par une marque ⚠ sont critiques pour la sécurité. Ne les remplacer que par une pièce portant le numéro spécifié. |

**(Measuring conditions voltage and waveform)**
- Voltages and waveforms are measured between the measurement points and ground when camera shoots color bar chart of pattern box. They are reference values and reference waveforms. *
  (VOM of DC 10 MΩ input impedance is used.).
- Voltage values change depending upon input impedance of VOM used.) *

1. Connection

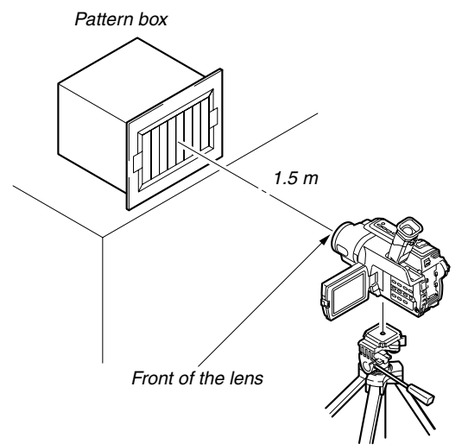


2. Adjust the distance so that the output waveform of Fig. a and the Fig. b can be obtain.

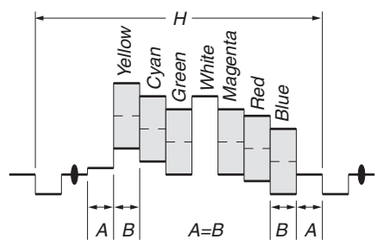


*Fig. a (Video output terminal output waveform)*

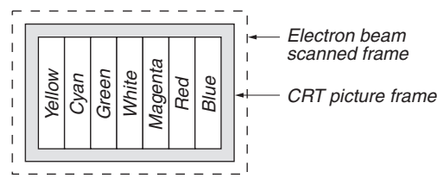


*Fig.b (Picture on monitor TV)*

When indicating parts by reference number, please include the board name.

## CD-354 (CCD IMAGER) PRINTED WIRING BOARD

• : Uses unleaded solder.

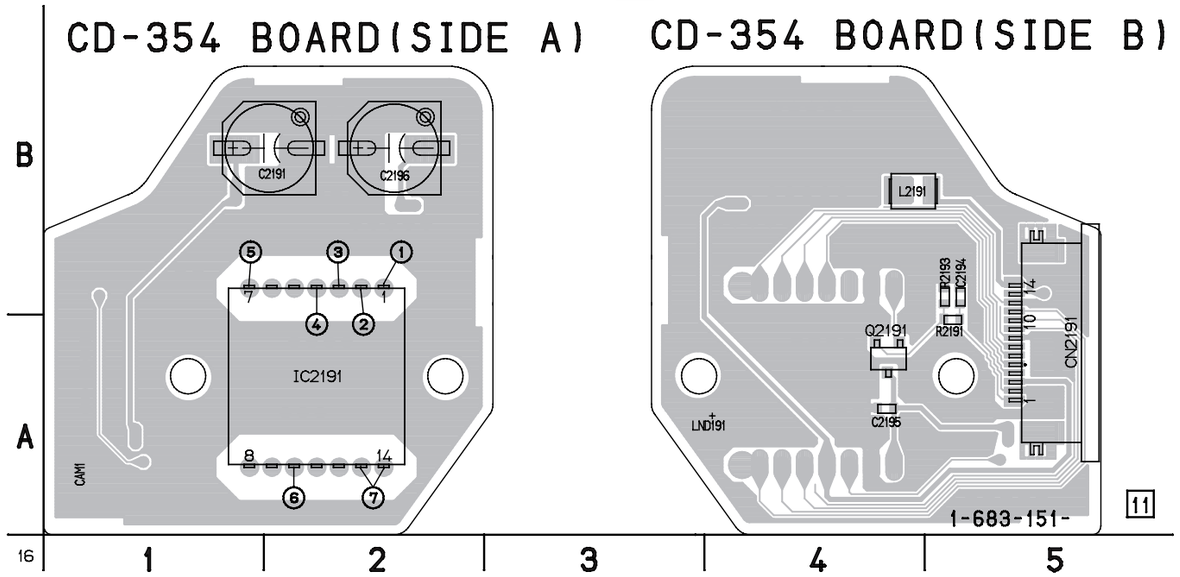


**For printed wiring board**

- Refer to page 4-63 for parts location.
- This board consists of multiple layers. However, only the sides (layers) A and B are shown.
- Chip parts

Transistor

There are a few cases that the part printed on this diagram isn't mounted in this model.

**For Schematic Diagram**

- Refer to page 4-60 for waveforms.

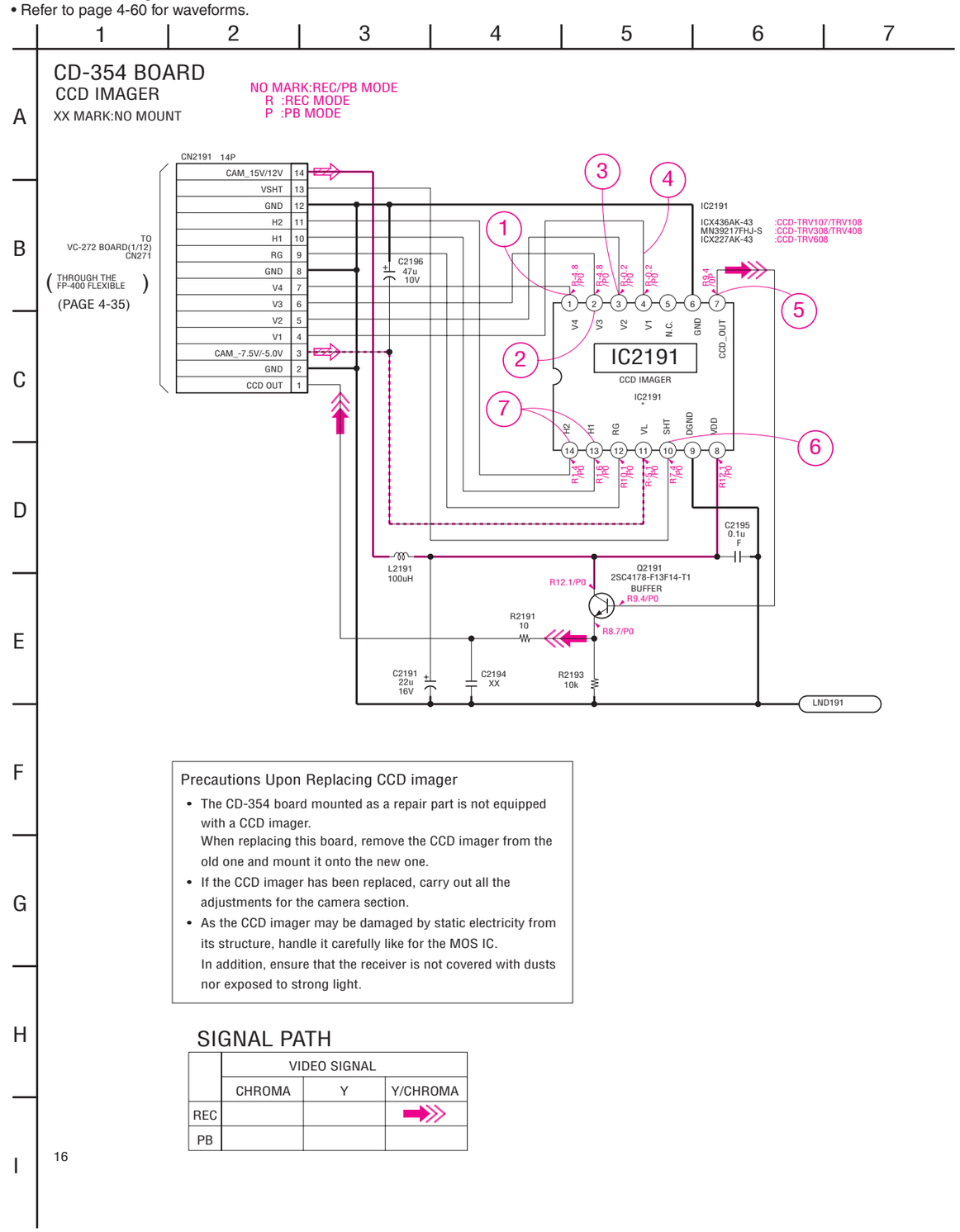


**Precautions Upon Replacing CCD imager**

- The CD-354 board mounted as a repair part is not equipped with a CCD imager.
  When replacing this board, remove the CCD imager from the old one and mount it onto the new one.
- If the CCD imager has been replaced, carry out all the adjustments for the camera section.
- As the CCD imager may be damaged by static electricity from its structure, handle it carefully like for the MOS IC.
  In addition, ensure that the receiver is not covered with dusts nor exposed to strong light.

## SIGNAL PATH

| | VIDEO SIGNAL | | |
|---|---|---|---|
| | CHROMA | Y | Y/CHROMA |
| REC | | | ➡ |
| PB | | | |

## LB-073 (BACK LIGHT (EVF)) PRINTED WIRING BOARD

• : Uses unleaded solder.

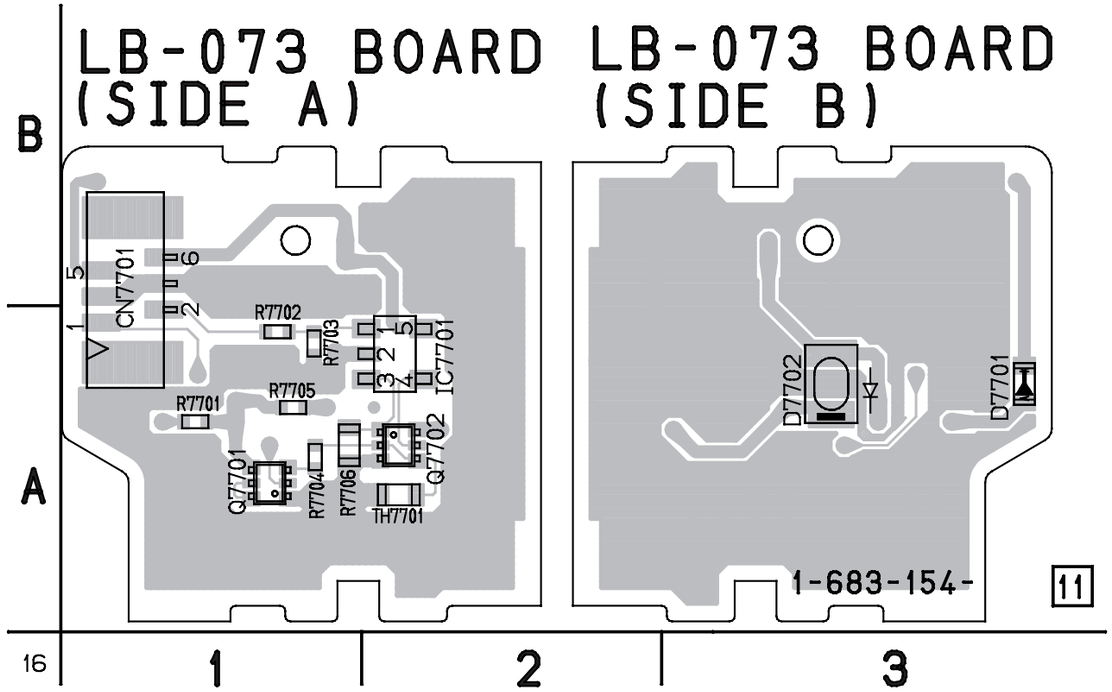


**For printed wiring board**

- Refer to page 4-63 for parts location.
- This board consists of multiple layers. However, only the sides (layers) A and B are shown.
- Chip parts

Transistor

There are a few cases that the part printed on this diagram isn't mounted in this model.

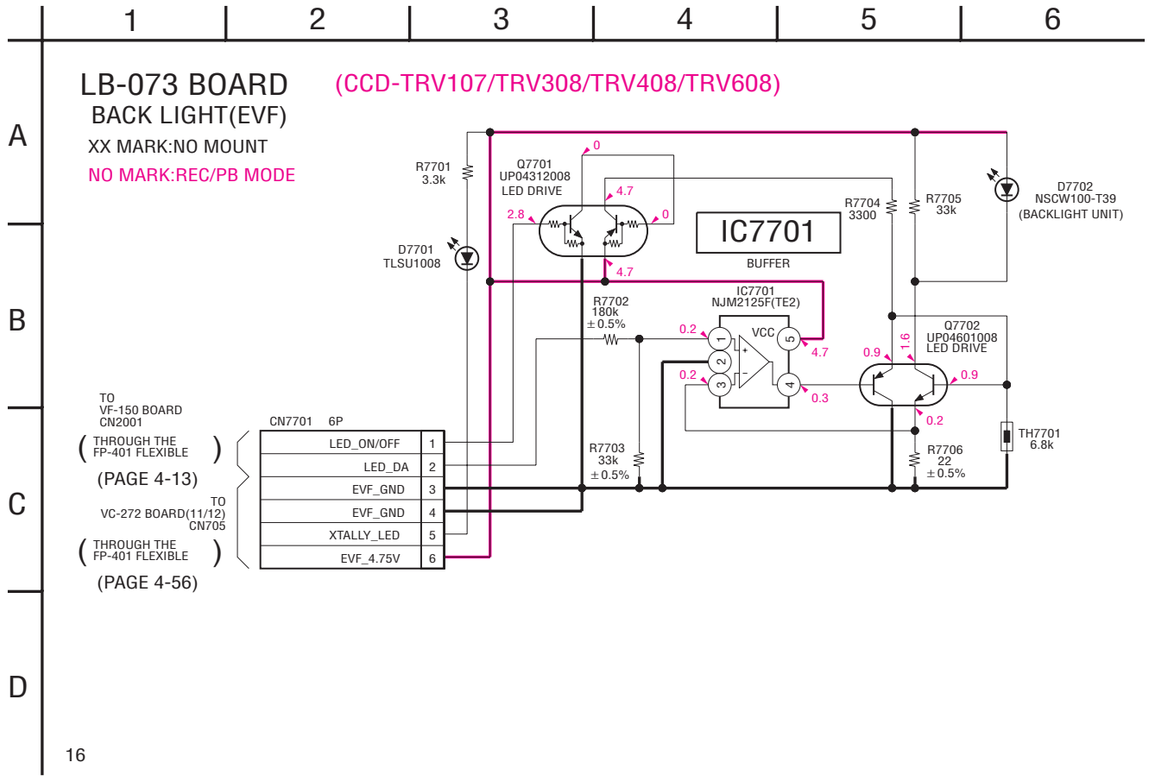

**VF-150 (RGB DRIVE/TG) PRINTED WIRING BOARD**

• : Uses unleaded solder.

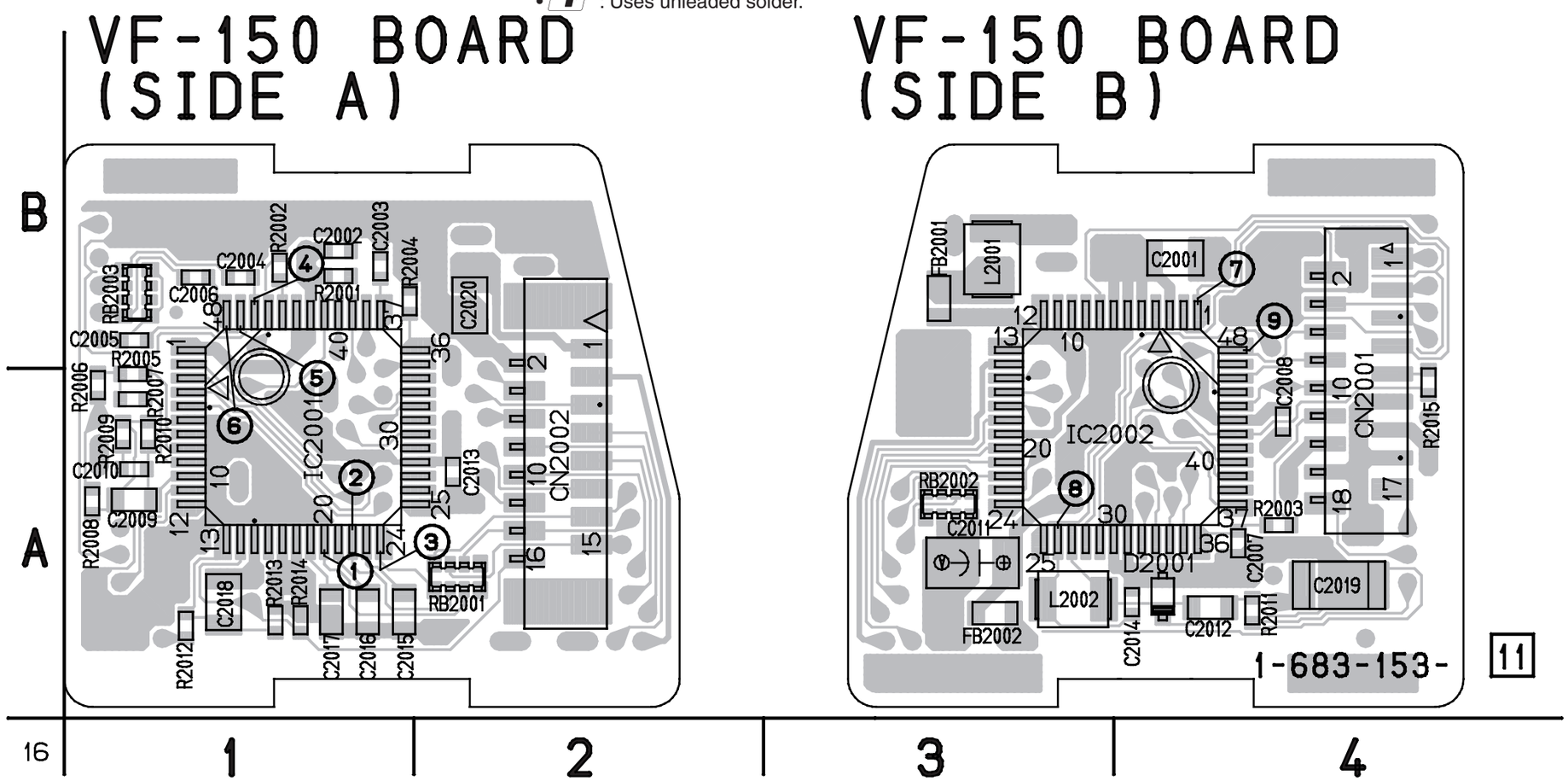


**For printed wiring board**

- Refer to page 4-63 for parts location.
- This board consists of multiple layers. However, only the sides (layers) A and B are shown.

There are a few cases that the part printed on this diagram isn't mounted in this model.

**For Schematic Diagram**

- Refer to page 4-11 for printed wiring board.
- Refer to page 4-60 for waveforms.

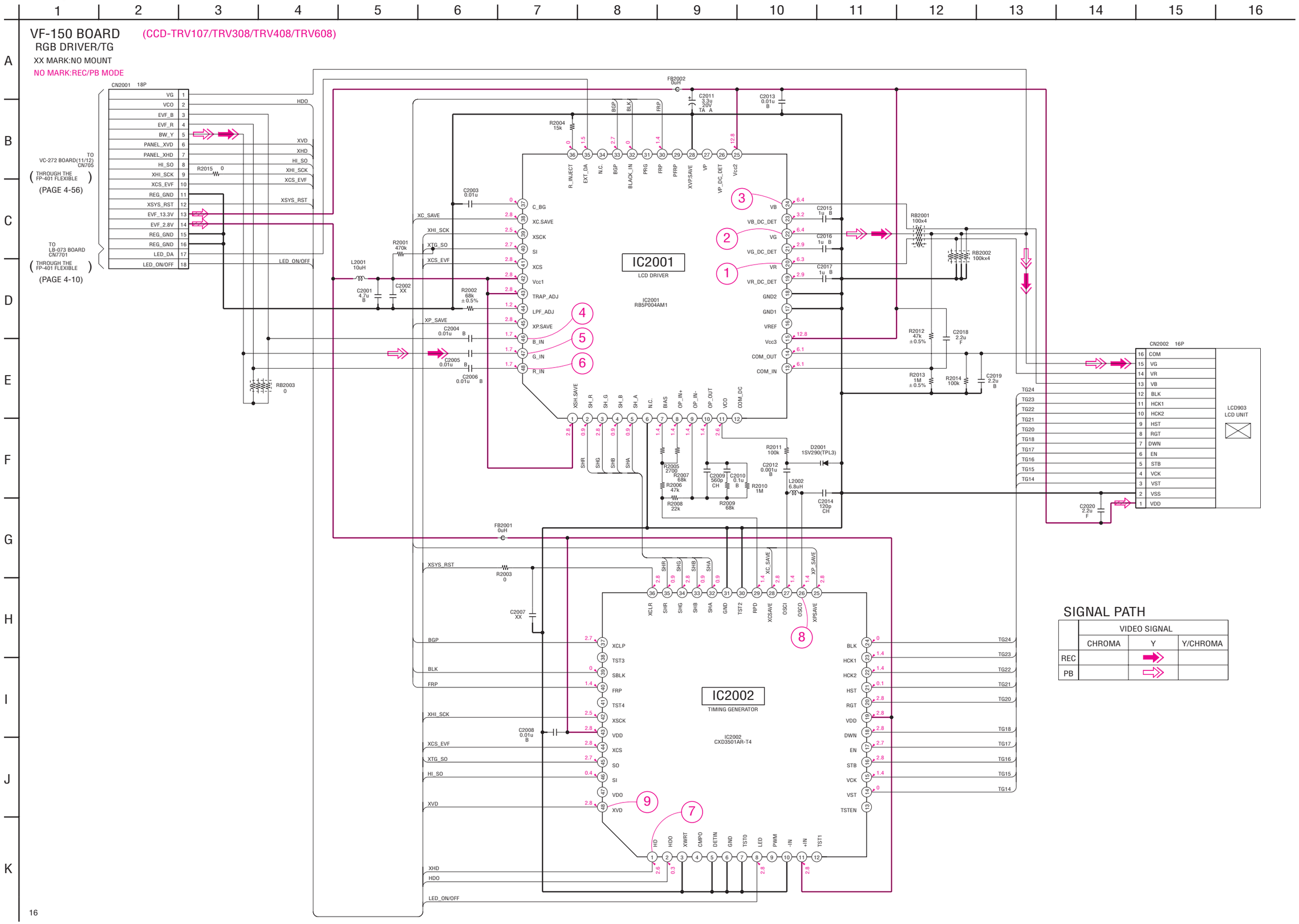






**RGB DRIVE/TG**
**VF-150**

## SI-033 (STEADY SHOT, MIC) PRINTED WIRING BOARD

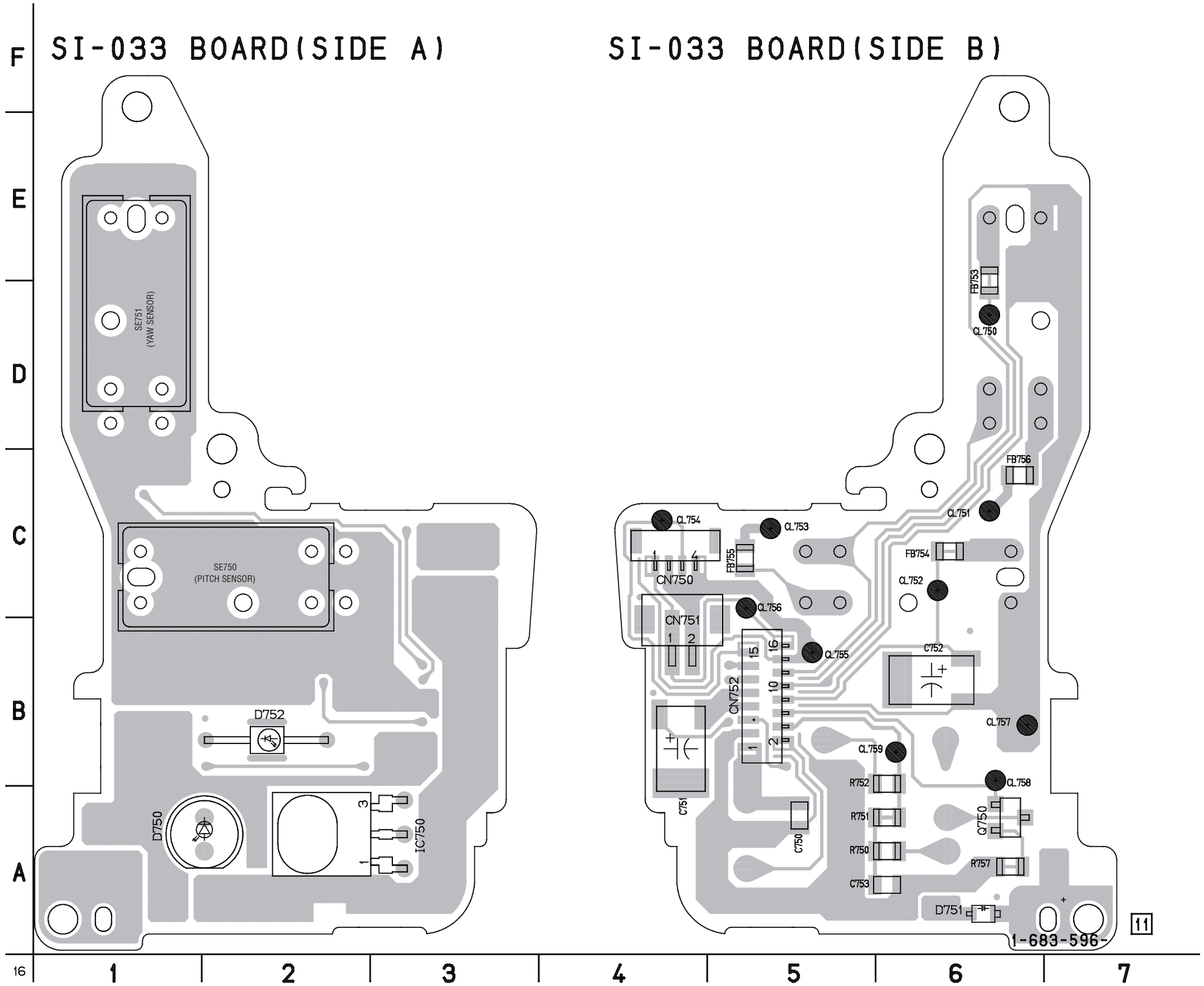


**For printed wiring board**
- Refer to page 4-63 for parts location.
- This board consists of multiple layers. However, only the sides (layers) A and B are shown.
- Chip parts

Transistor

There are a few cases that the part printed on this diagram isn't mounted in this model.

**For Schematic Diagram**

• Refer to page 4-15 for printed wiring board.

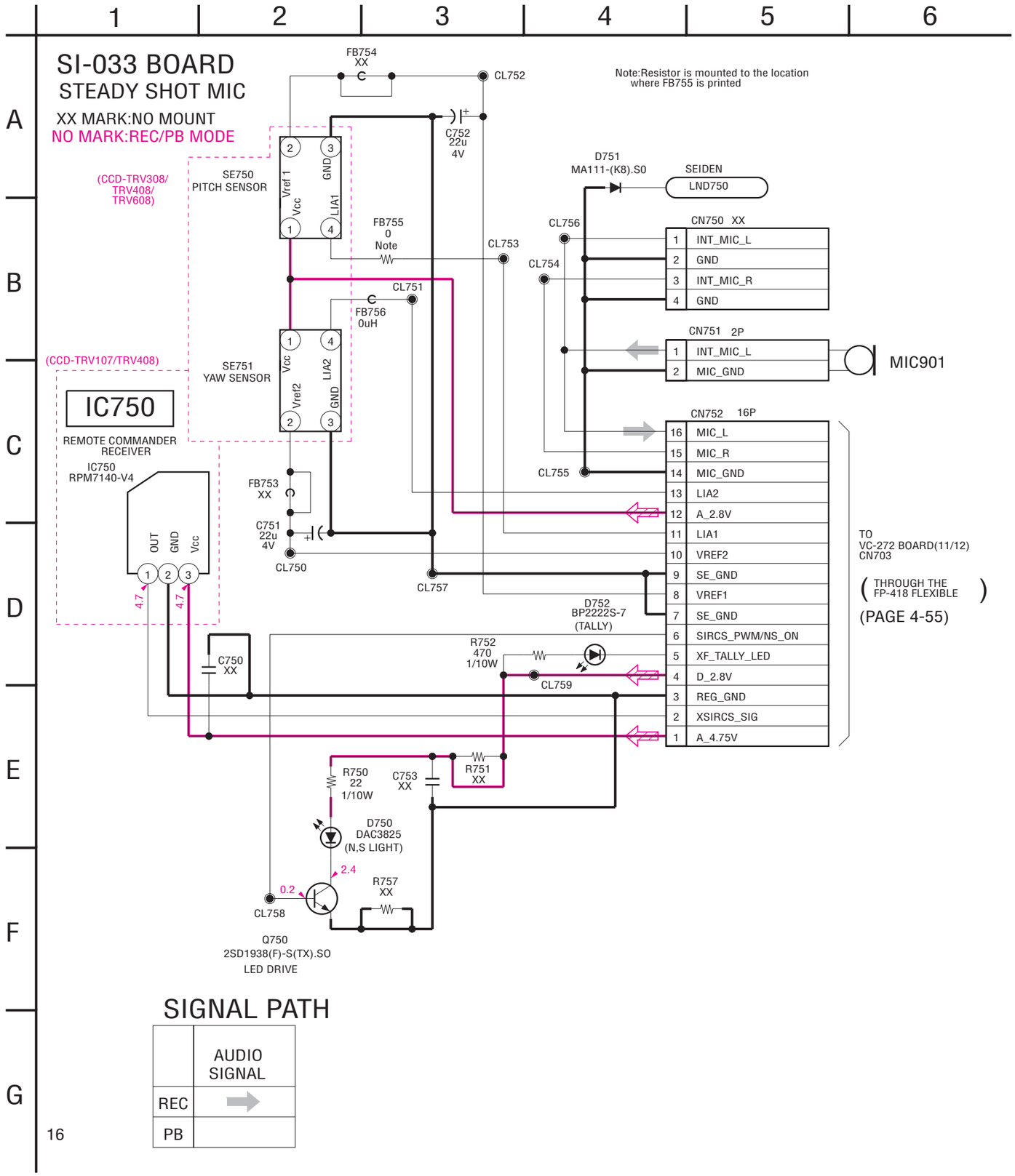

**PD-156 (RGB DRIVE, TIMING GENERATOR, LCD DRIVE, BACKLIGHT DRIVE) PRINTED WIRING BOARD**

• : Uses unleaded solder.

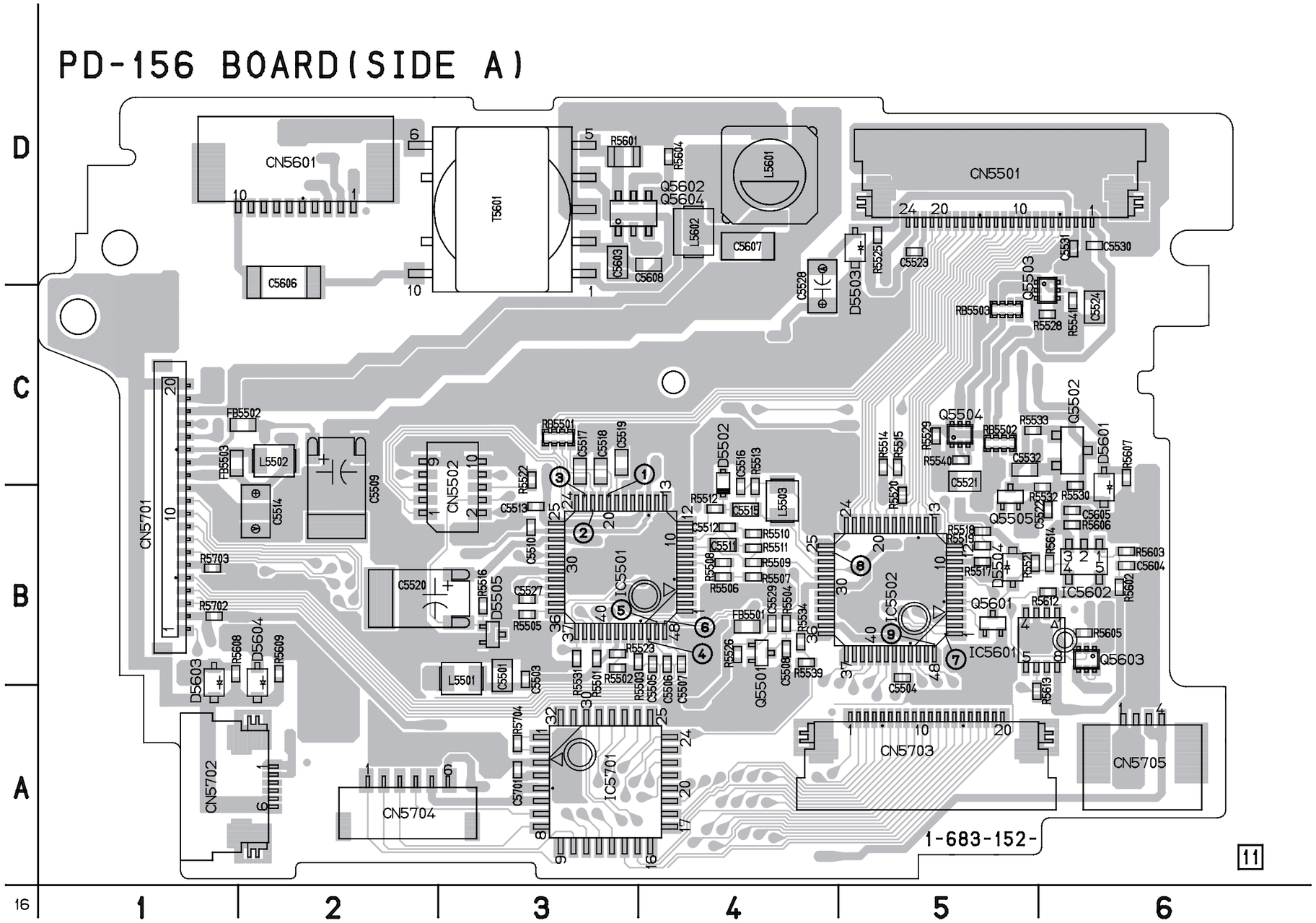


**For printed wiring board**

- Refer to page 4-63 for parts location.
- This board consists of multiple layers. However, only the sides (layers) A and B are shown.
- Chip parts

Transistor

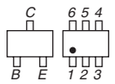


Diode

There are a few cases that the part printed on this diagram isn't mounted in this model.

• : Uses unleaded solder.

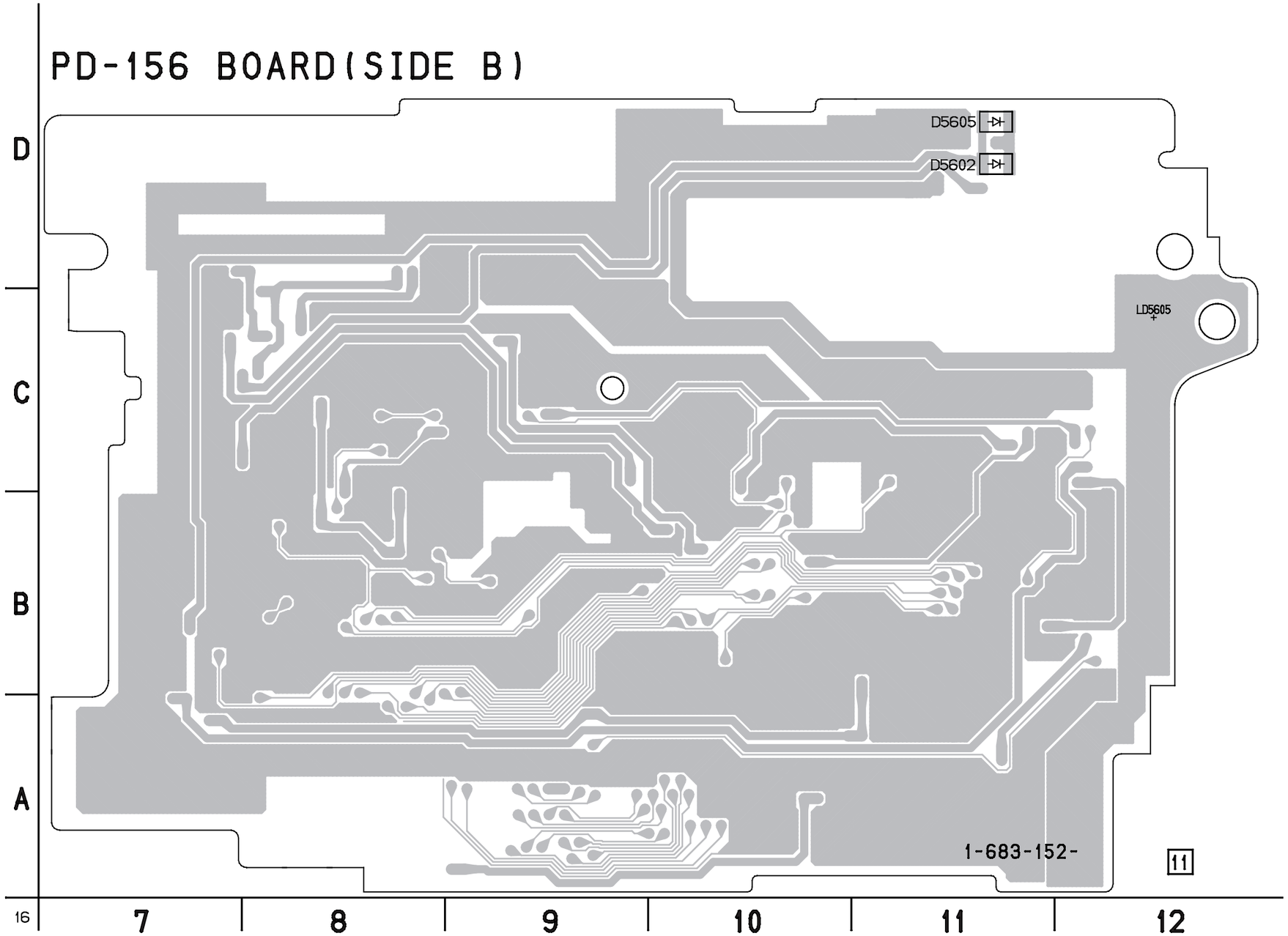




RGB DRIVE, TIMING GENERATOR, LCD DRIVE, BACKLIGHT DRIVE
PD-156

**For Schematic Diagram**

- Refer to page 4-19 for printed wiring board.
- Refer to page 4-61 for waveforms.

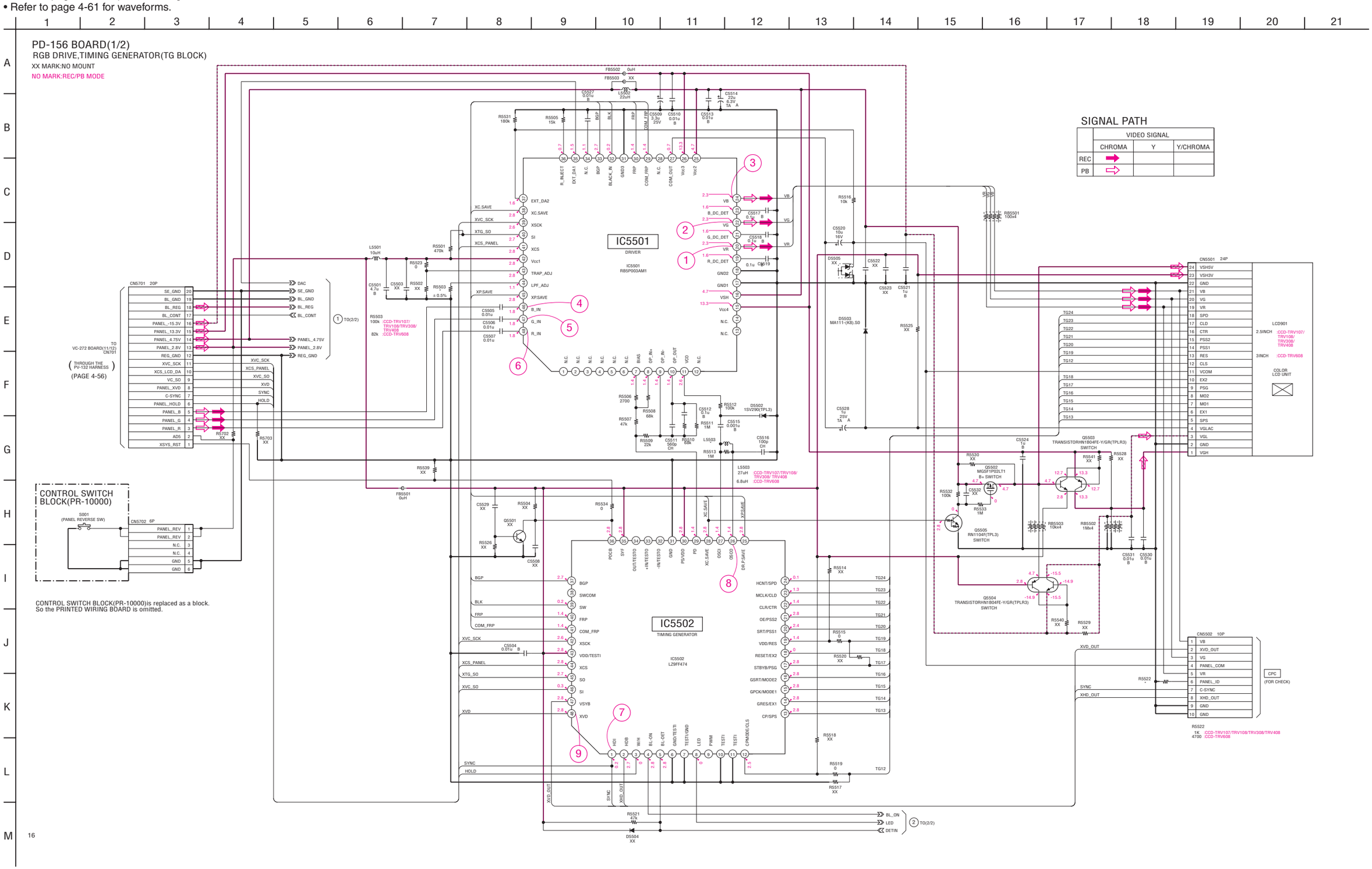

**For Schematic Diagram**

• Refer to page 4-19 for printed wiring board.

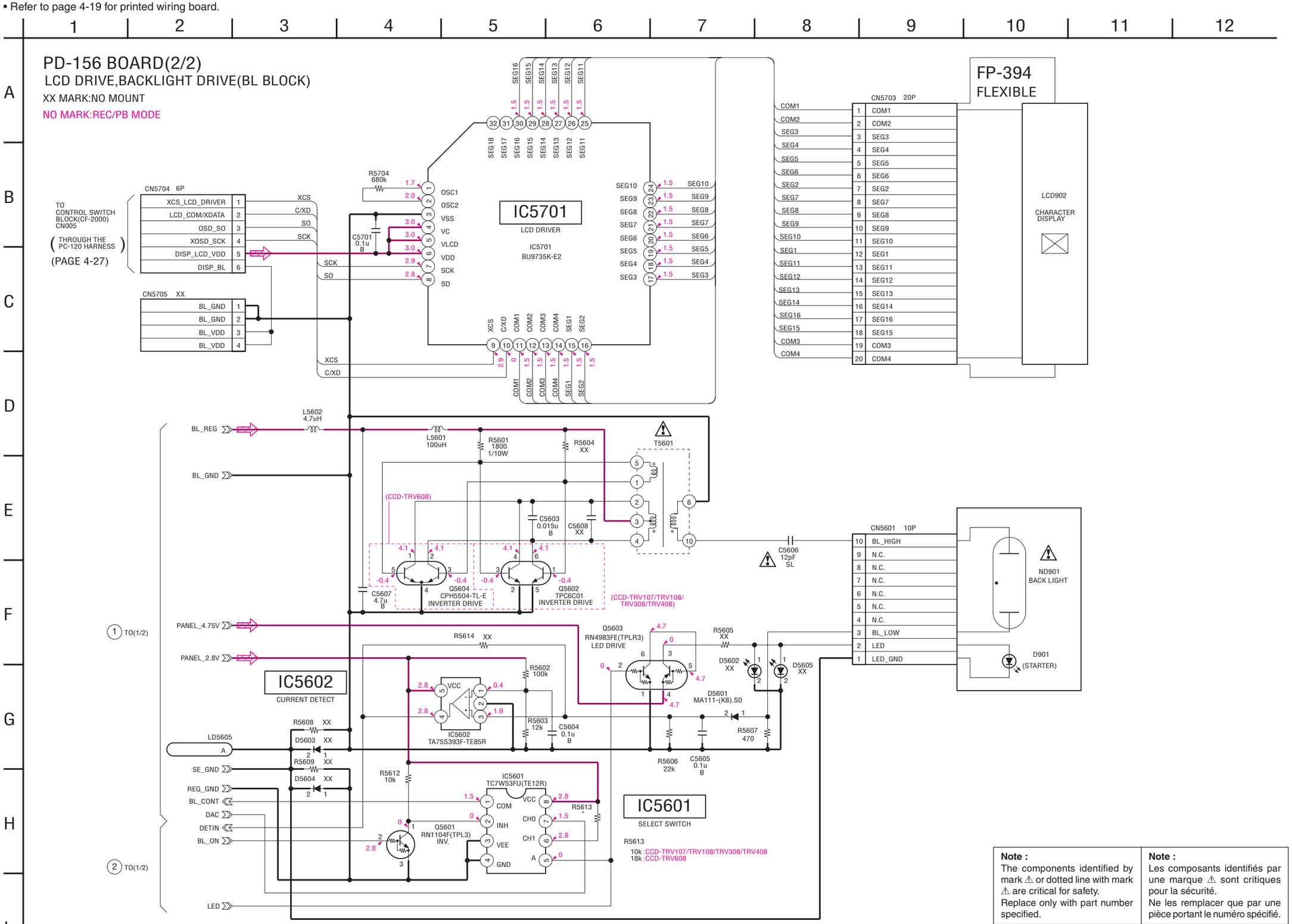


| Note : | Note : |
|---|---|
| The components identified by mark ⚠ or dotted line with mark ⚠ are critical for safety. Replace only with part number specified. | Les composants identifiés par une marque ⚠ sont critiques pour la sécurité. Ne les remplacer que par une pièce portant le numéro spécifié. |

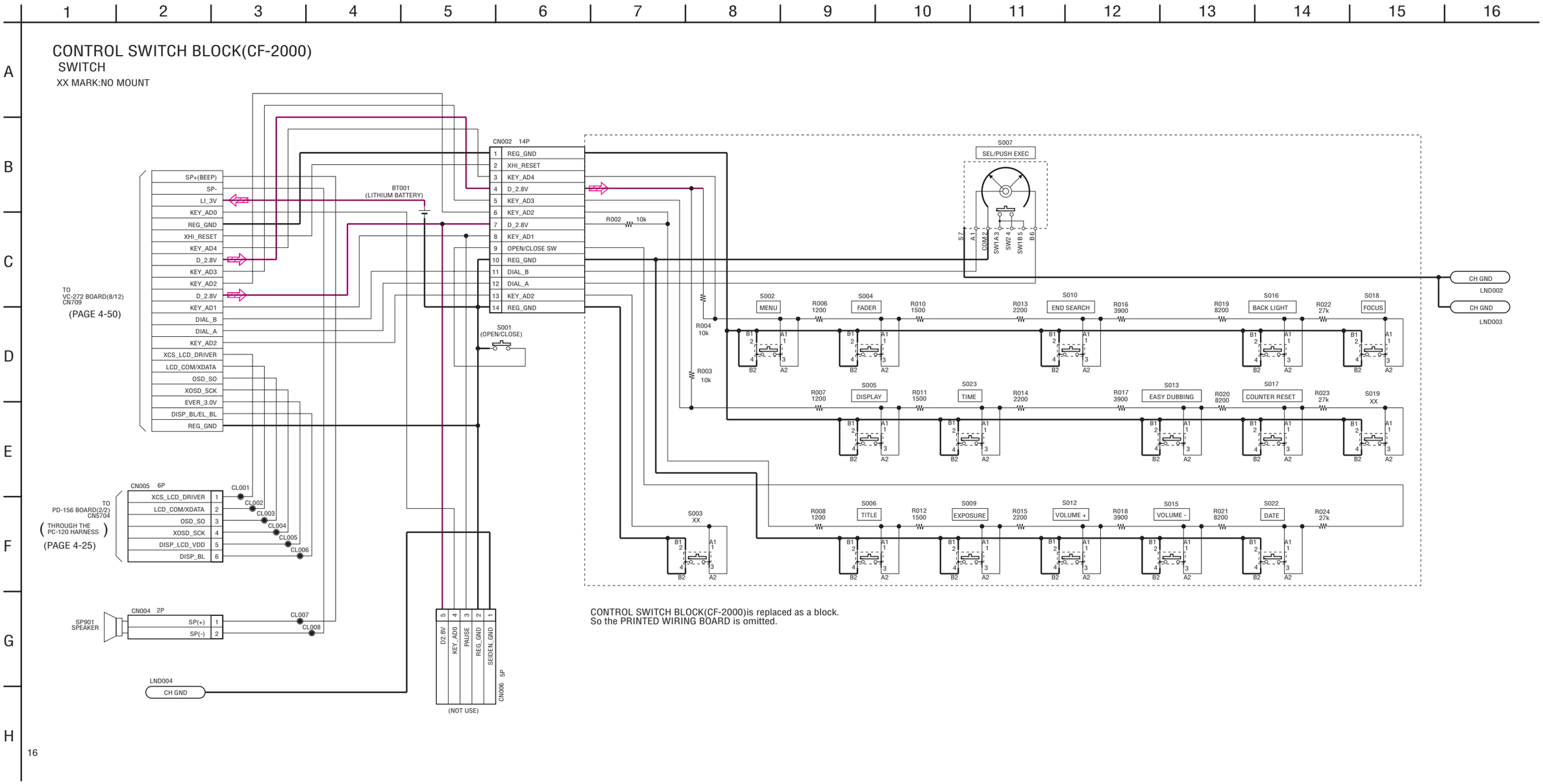
CONTROL SWITCH BLOCK(CF-2000)
SWITCH
XX MARK:NO MOUNT
CN002 14P
REG_GND
XHI_RESET
KEY_AD4
D_2.8V
KEY_AD3
KEY_AD2
D_2.8V
KEY_AD1
OPEN/CLOSE SW
REG_GND
DIAL_B
DIAL_A
KEY_AD2
REG_GND
SP+(BEEP)
SP-
LI_3V
KEY_AD0
REG_GND
XHI_RESET
KEY_AD4
D_2.8V
KEY_AD3
KEY_AD2
D_2.8V
KEY_AD1
DIAL_B
DIAL_A
KEY_AD2
XCS_LCD_DRIVER
LCD_COM/XDATA
OSD_SO
XOSD_SCK
EVER_3.0V
DISP_BL/EL_BL
REG_GND
TO
VC-272 BOARD(8/12)
CN709
(PAGE 4-50)
BT001
(LITHIUM BATTERY)
R002 10k
R004 10k
R003 10k
S001
(OPEN/CLOSE)
S007
SEL/PUSH EXEC
CH GND
LND002
CH GND
LND003
S002 MENU
S004 FADER
S010 END SEARCH
S016 BACK LIGHT
S018 FOCUS
S005 DISPLAY
S023 TIME
S013 EASY DUBBING
S017 COUNTER RESET
S019 XX
S003 XX
S006 TITLE
S009 EXPOSURE
S012 VOLUME +
S015 VOLUME -
S022 DATE
CN005 6P
XCS_LCD_DRIVER
LCD_COM/XDATA
OSD_SO
XOSD_SCK
DISP_LCD_VDD
DISP_BL
TO
PD-156 BOARD(2/2)
CN5704
THROUGH THE
PC-120 HARNESS
(PAGE 4-25)
CL001
CL002
CL003
CL004
CL005
CL006
CN004 2P
SP(+)
SP(-)
SP901
SPEAKER
CL007
CL008
LND004
CH GND
CN006 5P
D2.8V
KEY_AD0
PAUSE
REG_GND
SEIDEN_GND
(NOT USE)
CONTROL SWITCH BLOCK(CF-2000)is replaced as a block.
So the PRINTED WIRING BOARD is omitted.

**LS-057 (S/T REEL SENSOR), FP-228 (DEW SENSOR), FP-299 (MODE SWITCH), FP-300 (TAPE TOP), FP-302 (TAPE END), FP-301 (TAPE LED) FLEXIBLE BOARDS**

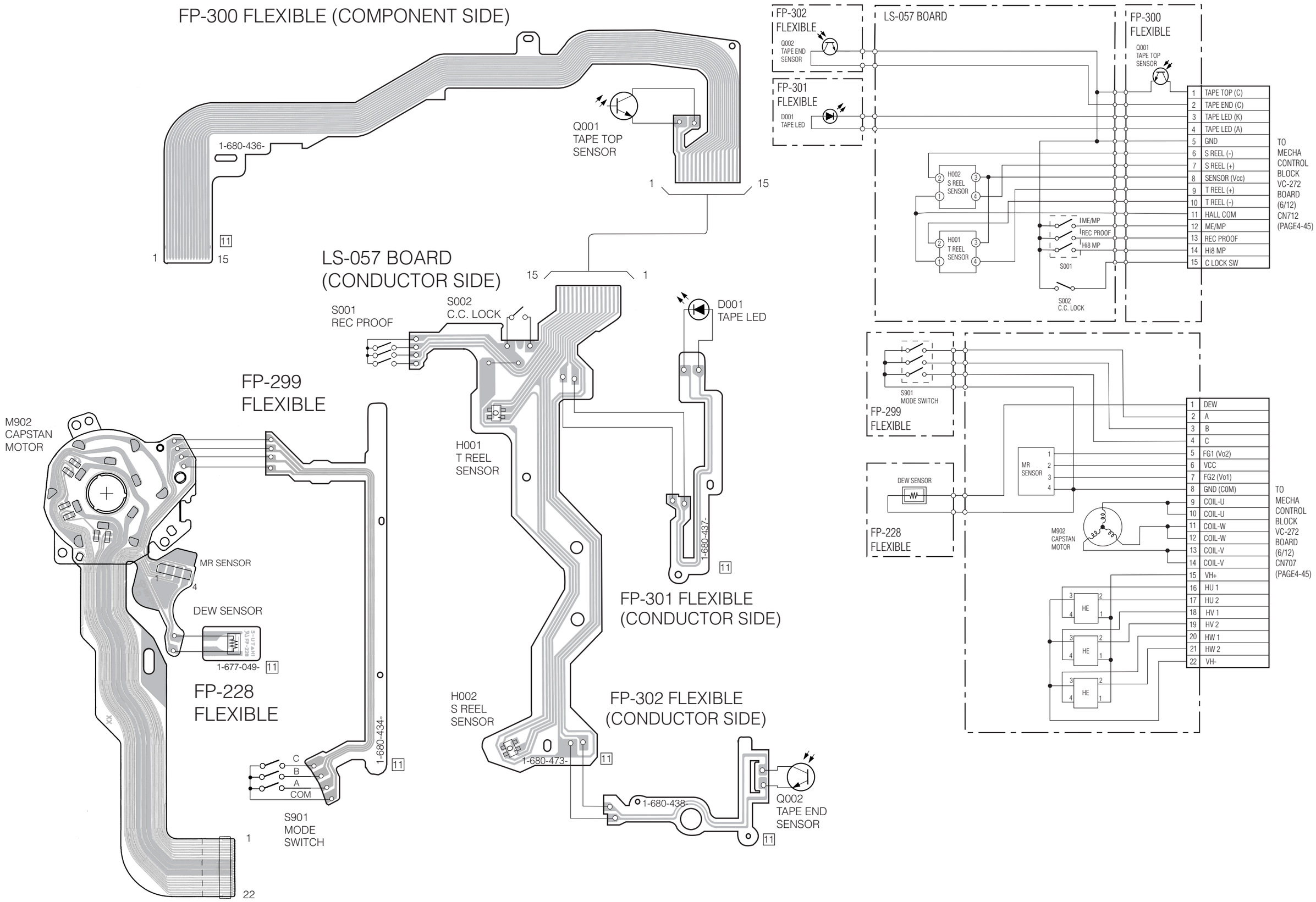




**S/T REEL SENSOR** LS-057 / **DEW SENSOR** FP-228 / **MODE SWITCH** FP-299 / **TAPE TOP** FP-300 / **TAPE END** FP-302 / **TAPE LED** FP-301

**VC-272 (CAMERA PROCESSOR AMP, Y/C PROCESSOR, FOCUS/ZOOM MOTOR DRIVE, REC/PB AMP, LINE OUT AMP, SERVO, MODE CONTROL, STEADY SHOT, HI CONTROL, AUDIO, DC-DC CONVERTER, CONNECTOR, USB SIGNAL) PRINTED WIRING BOARD**

• : Uses unleaded solder.

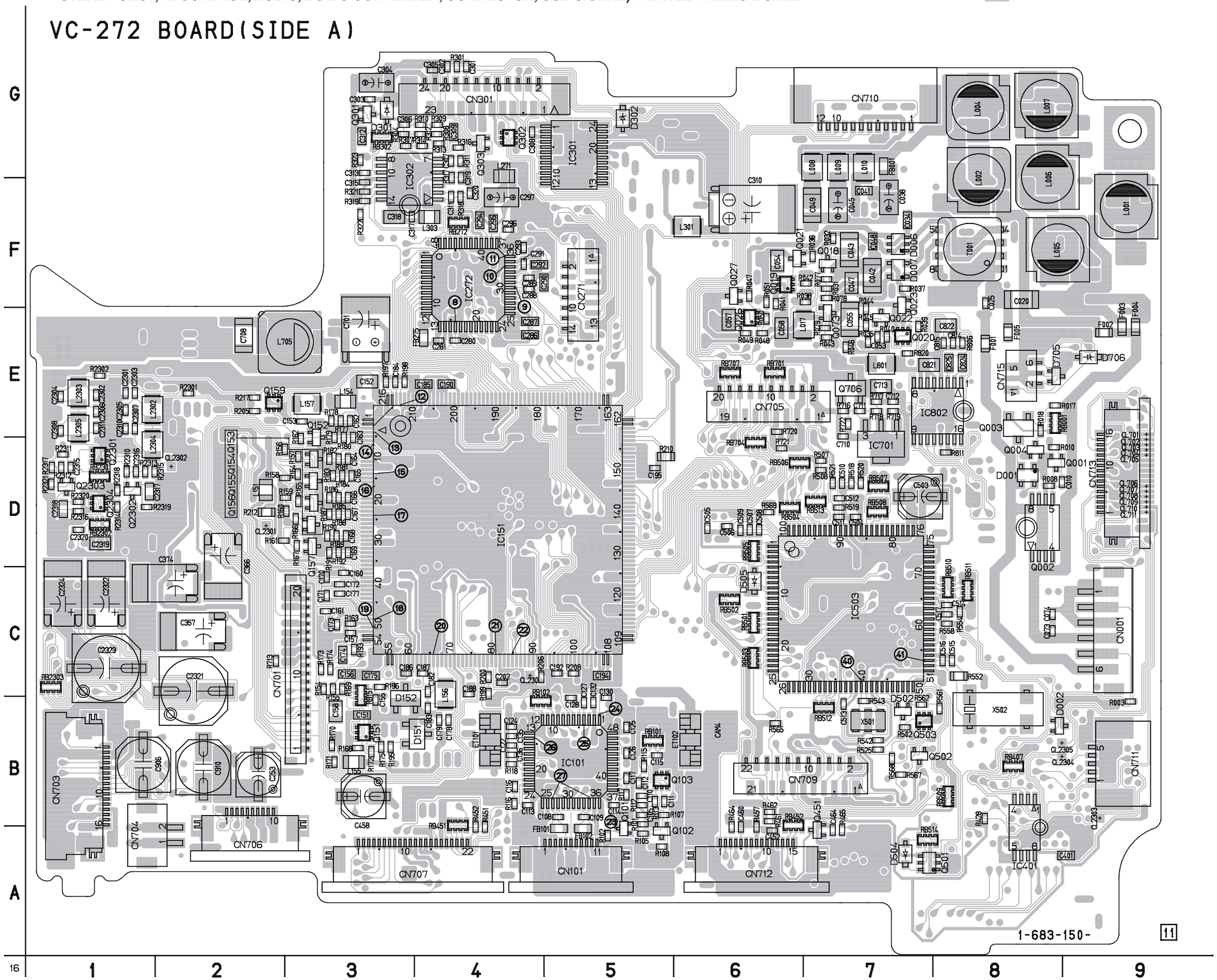


**CAMERA, VIDEO, SERVO, MODE/HI CONTROL, AUDIO, D-D CONV., USB**

VC-272

• LF : Uses unleaded solder.

**For printed wiring board**
- Refer to page 4-64 for parts location.
- This board consists of multiple layers. However, only the sides (layers) A and B are shown.
- Chip parts

Transistor

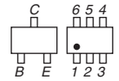


Diode

There are a few cases that the part printed on this diagram isn't mounted in this model.

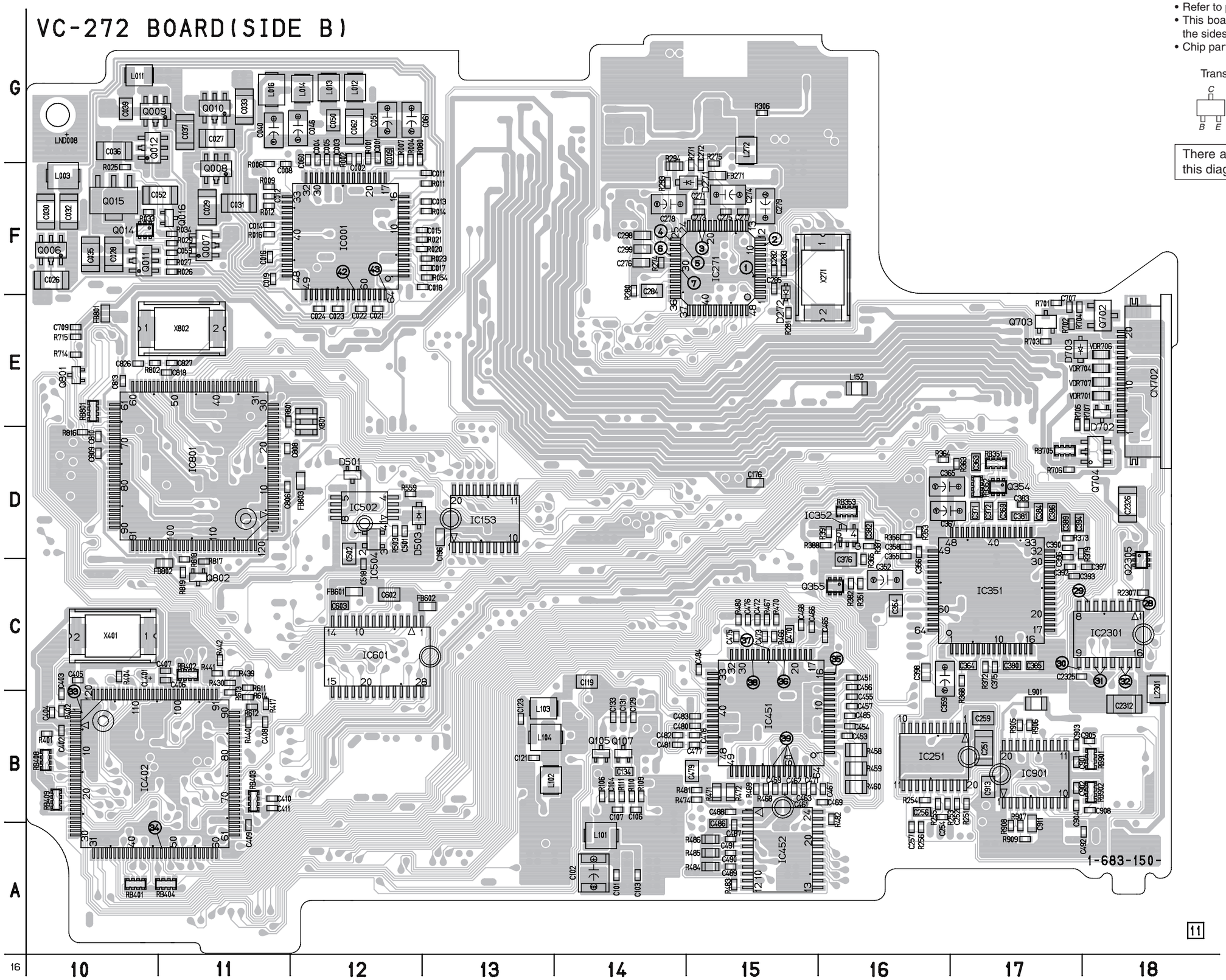

**For Schematic Diagram**

- Refer to page 4-31 for printed wiring board.
- Refer to page 4-61 for waveforms.

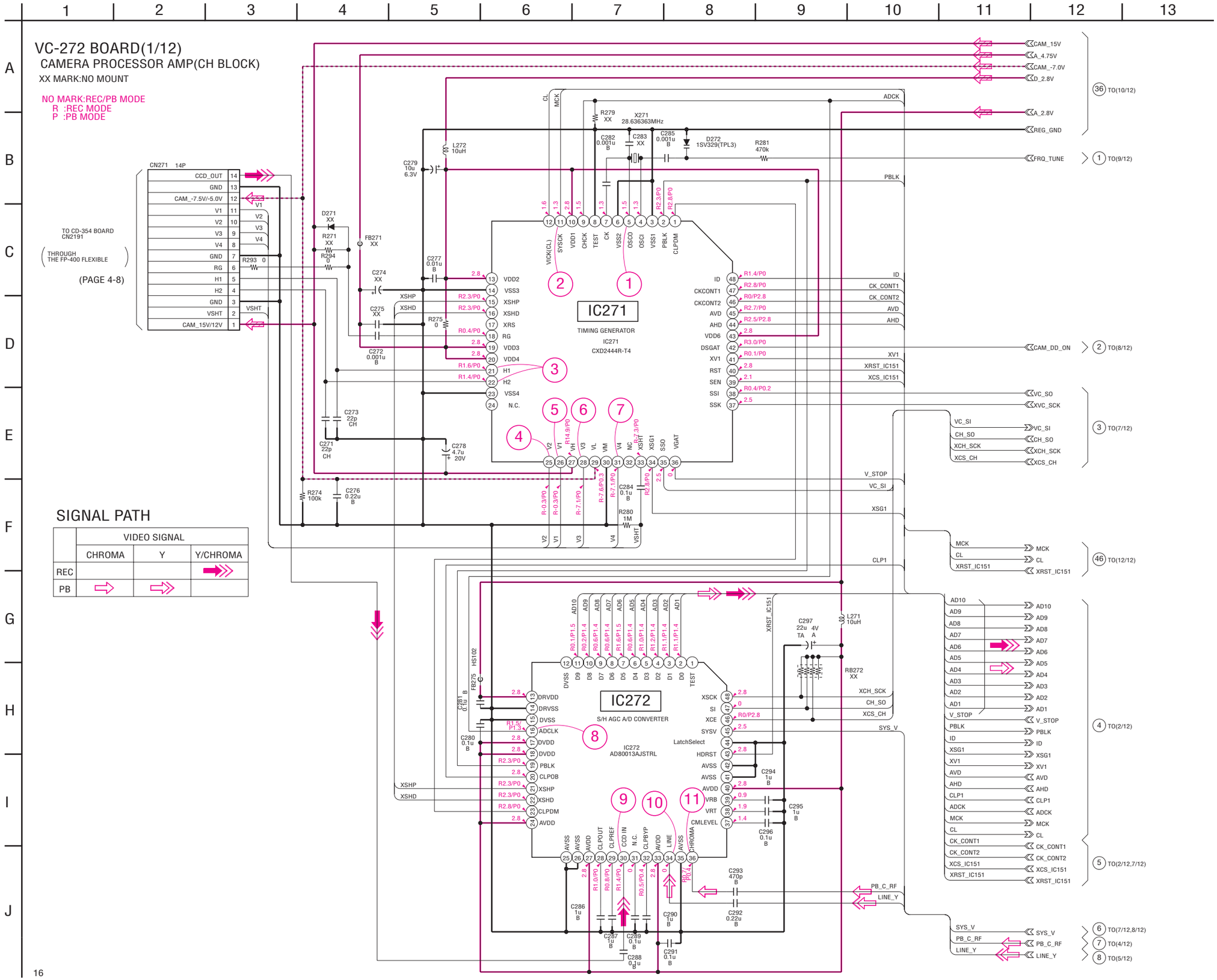




**CAMERA PROCESSOR AMP**
**VC-272 (1/12)**

**For Schematic Diagram**

- Refer to page 4-31 for printed wiring board.
- Refer to page 4-61, 4-62 for waveforms.

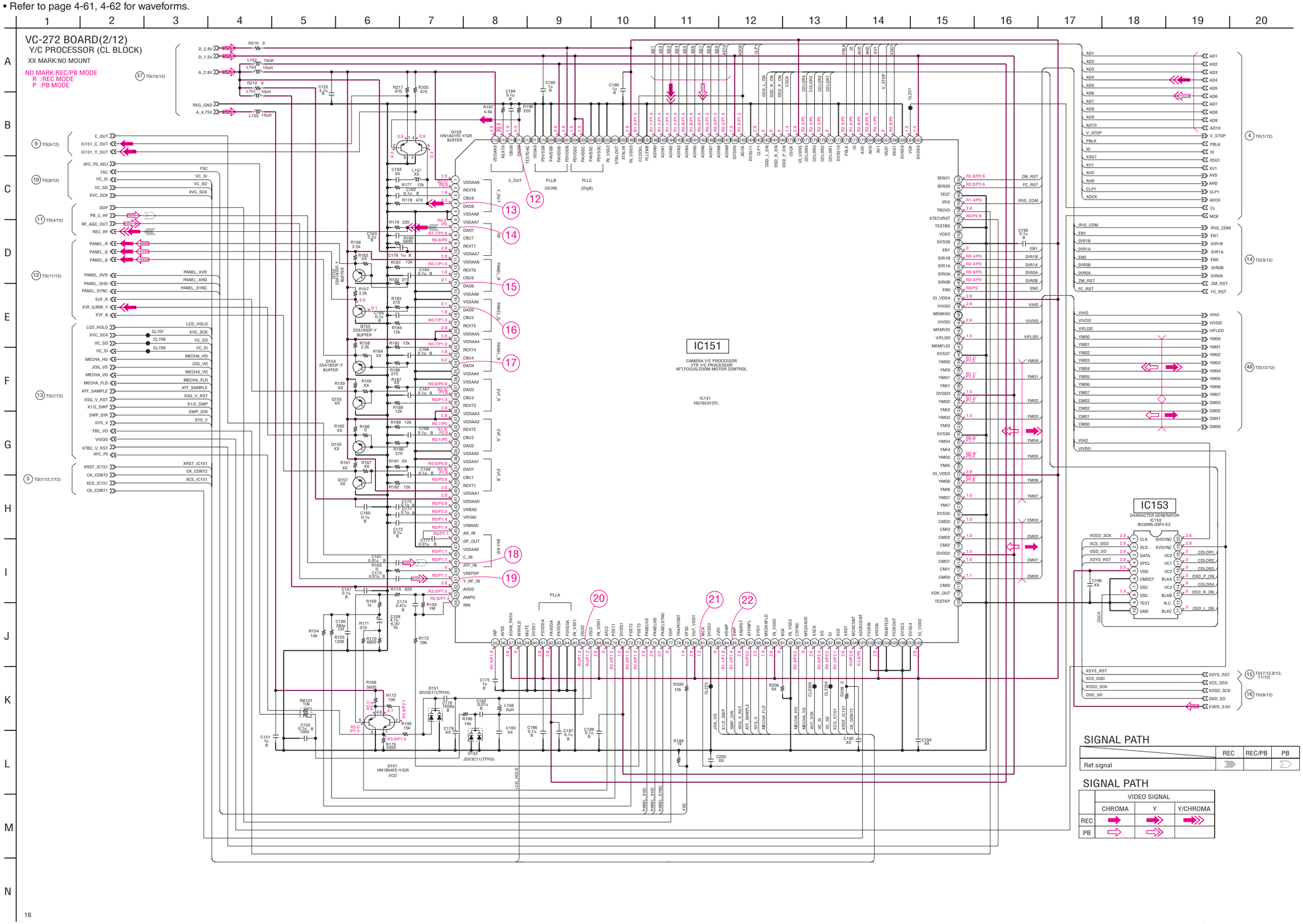






**Y/C PROCESSOR**
**VC-272 (2/12)**

**For Schematic Diagram**

• Refer to page 4-31 for printed wiring board.

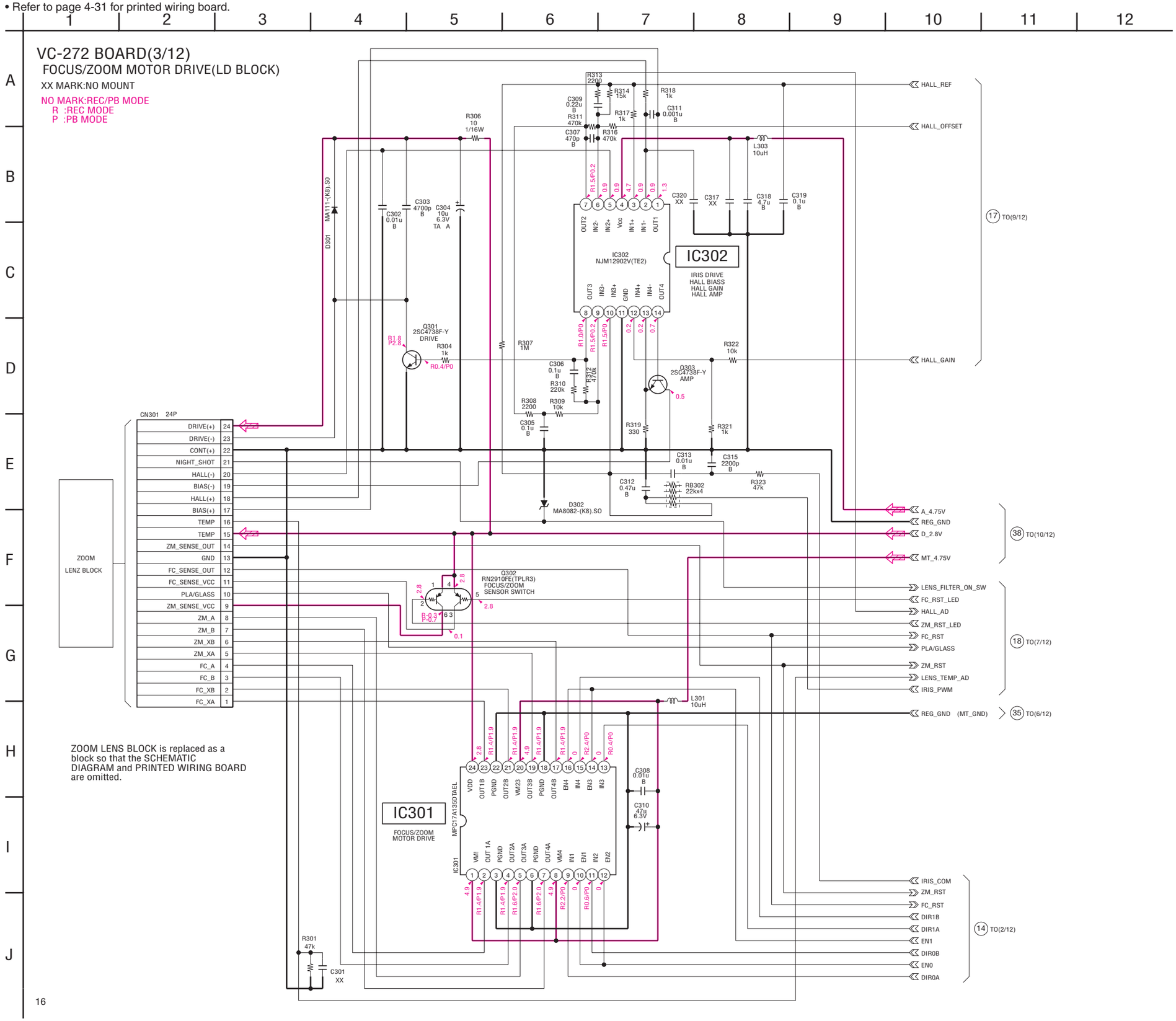




**FOCUS/ZOOM MOTOR DRIVE**
**VC-272 (3/12)**

**For Schematic Diagram**
- Refer to page 4-31 for printed wiring board.
- Refer to page 4-62 for waveforms.

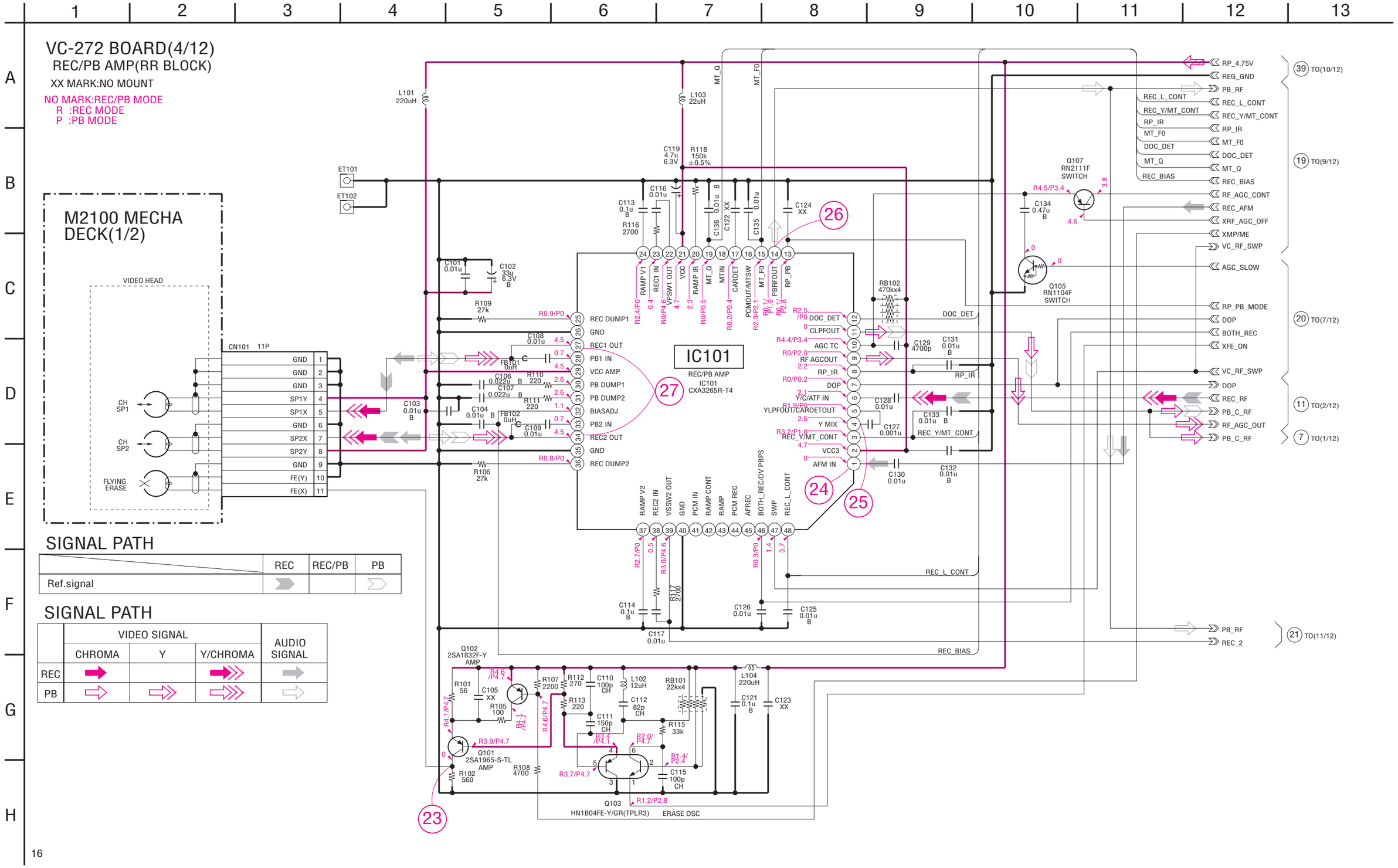

**For Schematic Diagram**
- Refer to page 4-31 for printed wiring board.
- Refer to page 4-62 for waveforms.

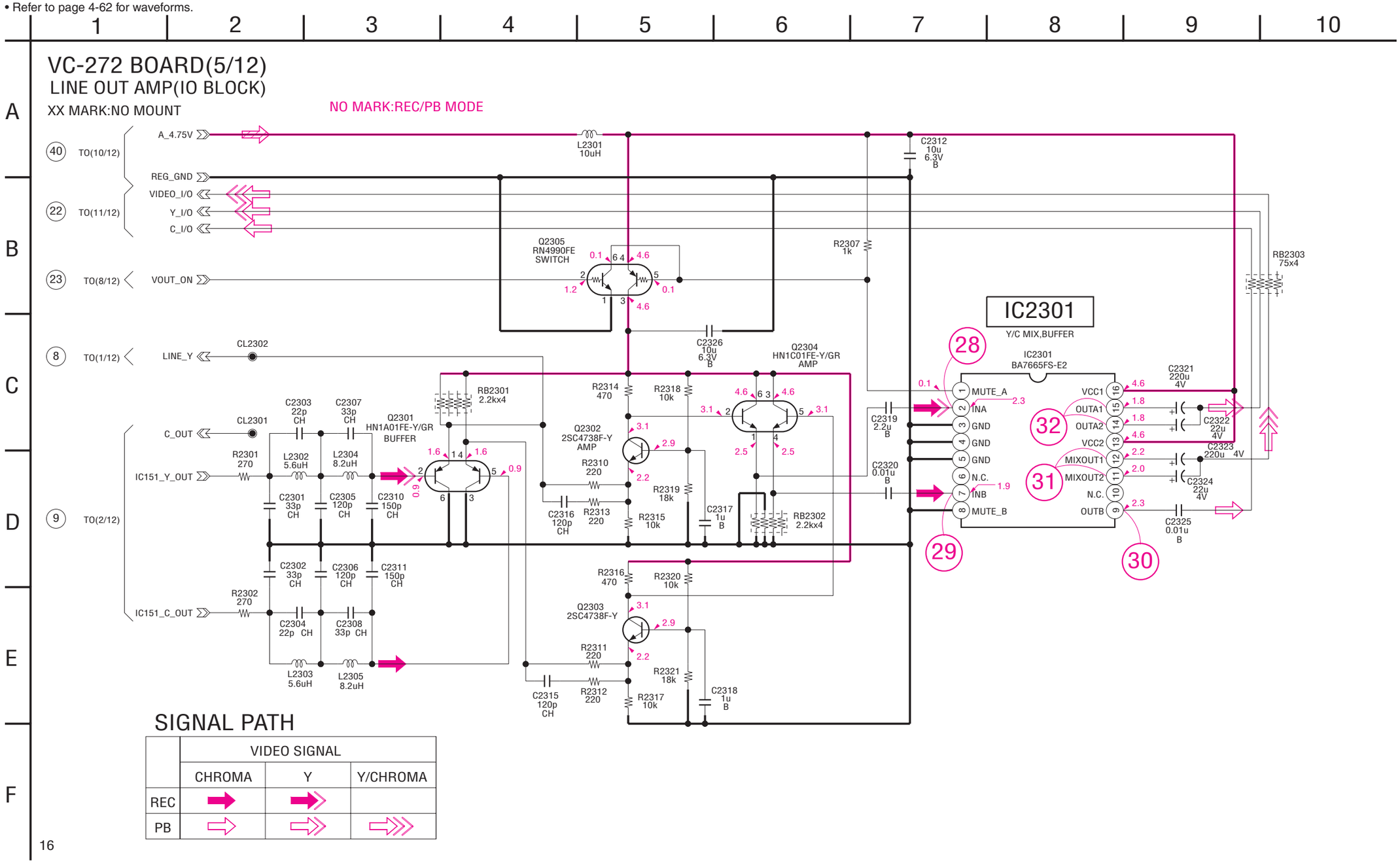




**LINE OUT AMP**
**VC-272 (5/12)**

**For Schematic Diagram**

- Refer to page 4-31 for printed wiring board.
- Refer to page 4-62 for waveforms.

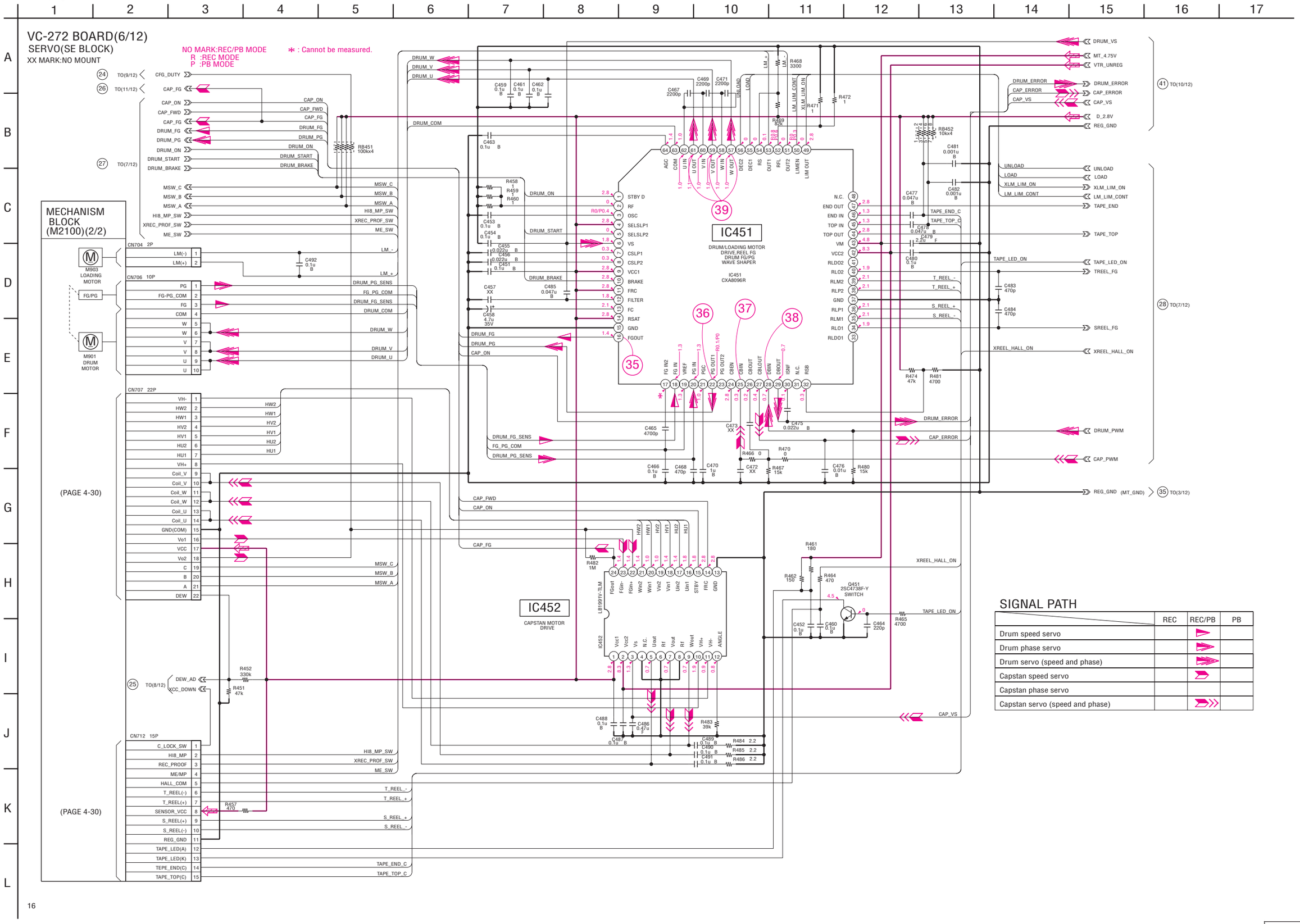


| | REC | REC/PB | PB |
|---|---|---|---|
| Drum speed servo | | | |
| Drum phase servo | | | |
| Drum servo (speed and phase) | | | |
| Capstan speed servo | | | |
| Capstan phase servo | | | |
| Capstan servo (speed and phase) | | | |

**For Schematic Diagram**

- Refer to page 4-31 for printed wiring board.
- Refer to page 4-62 for waveforms.

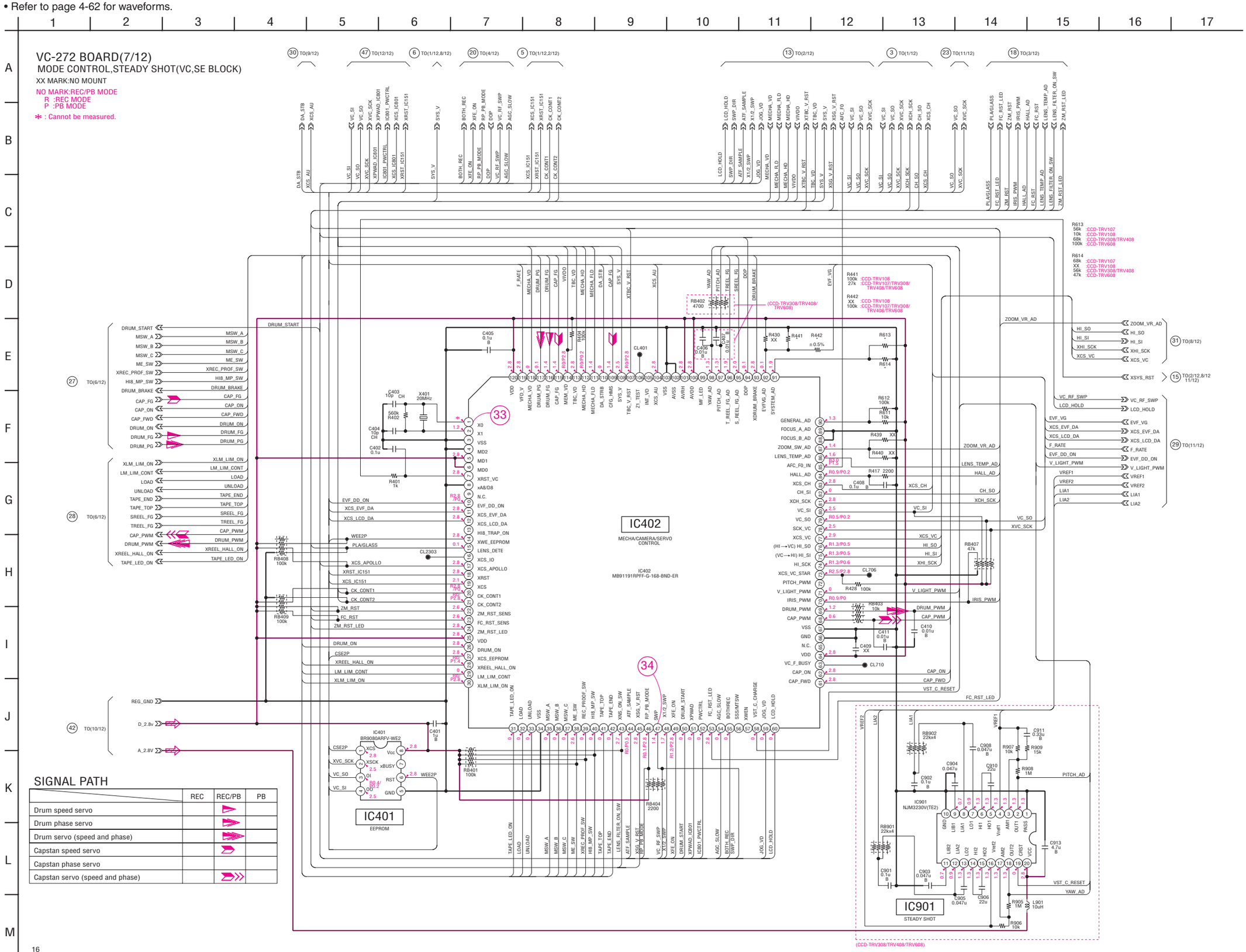




**MODE CONTROL, STEADY SHOT**
**VC-272 (7/12)**

**For Schematic Diagram**

- Refer to page 4-31 for printed wiring board.
- Refer to page 4-62 for waveforms.

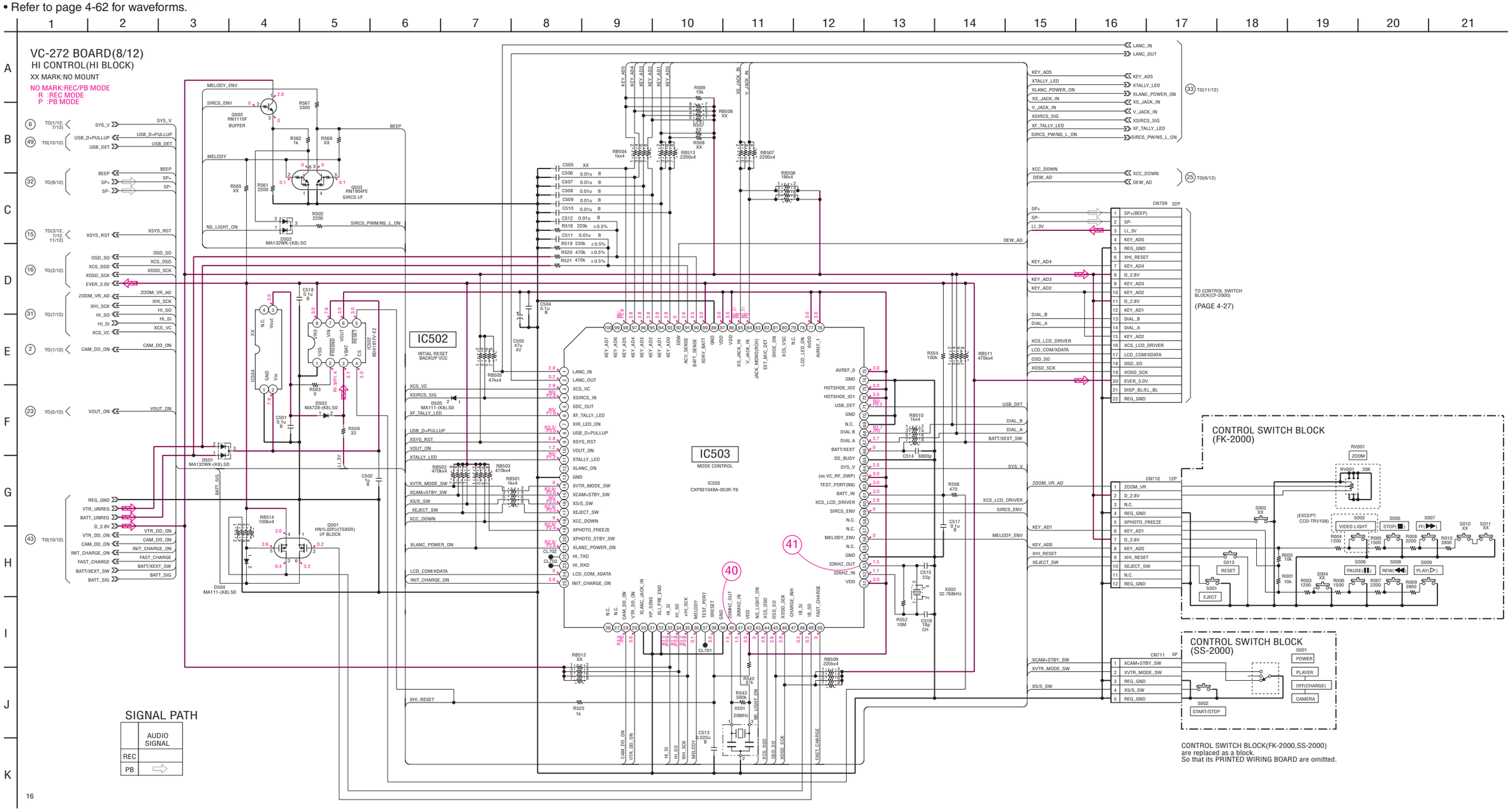






**HI CONTROL**
**VC-272 (8/12)**

**For Schematic Diagram**

• Refer to page 4-31 for printed wiring board.

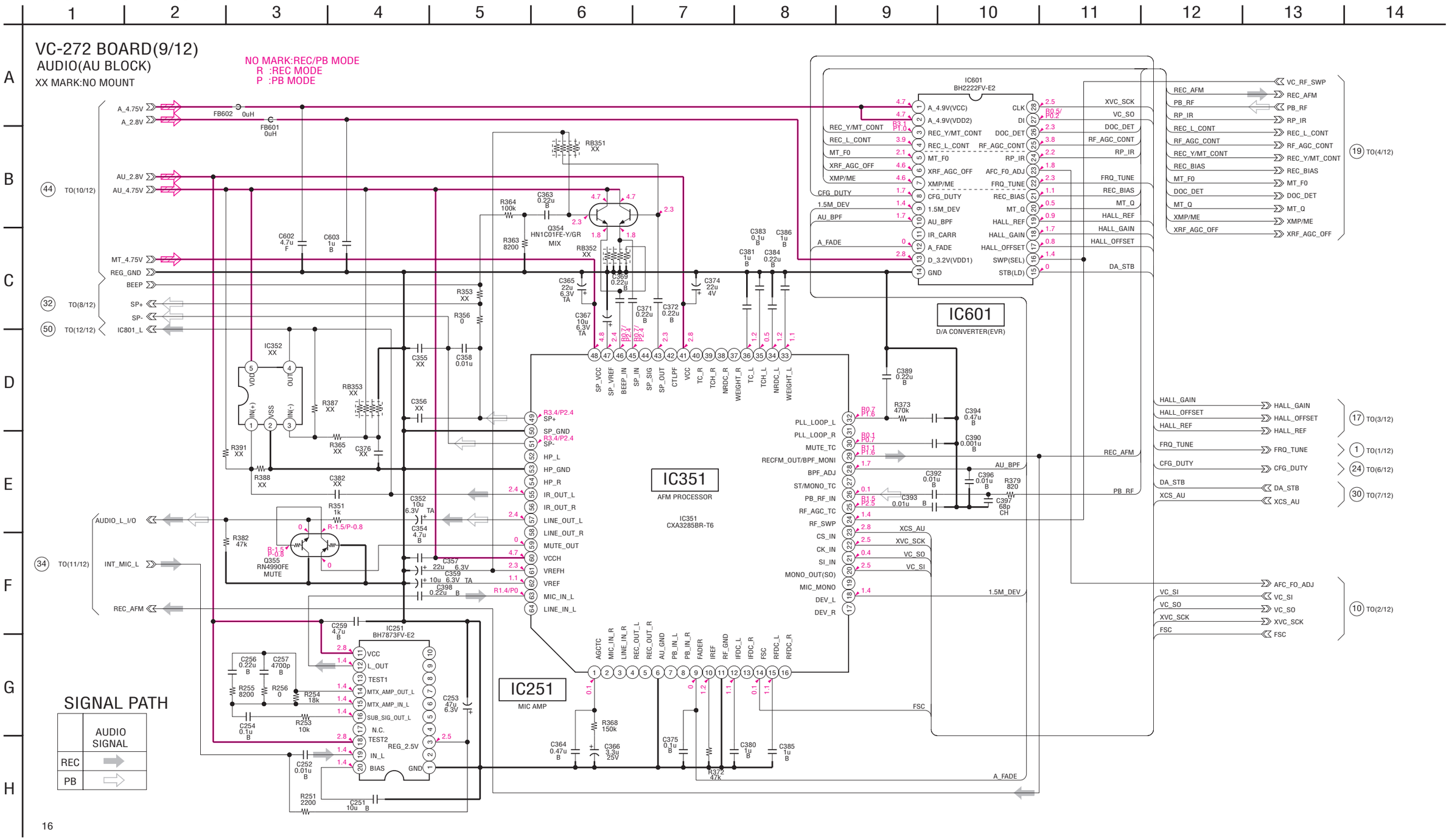

**For Schematic Diagram**

- Refer to page 4-31 for printed wiring board.
- Refer to page 4-62 for waveforms.

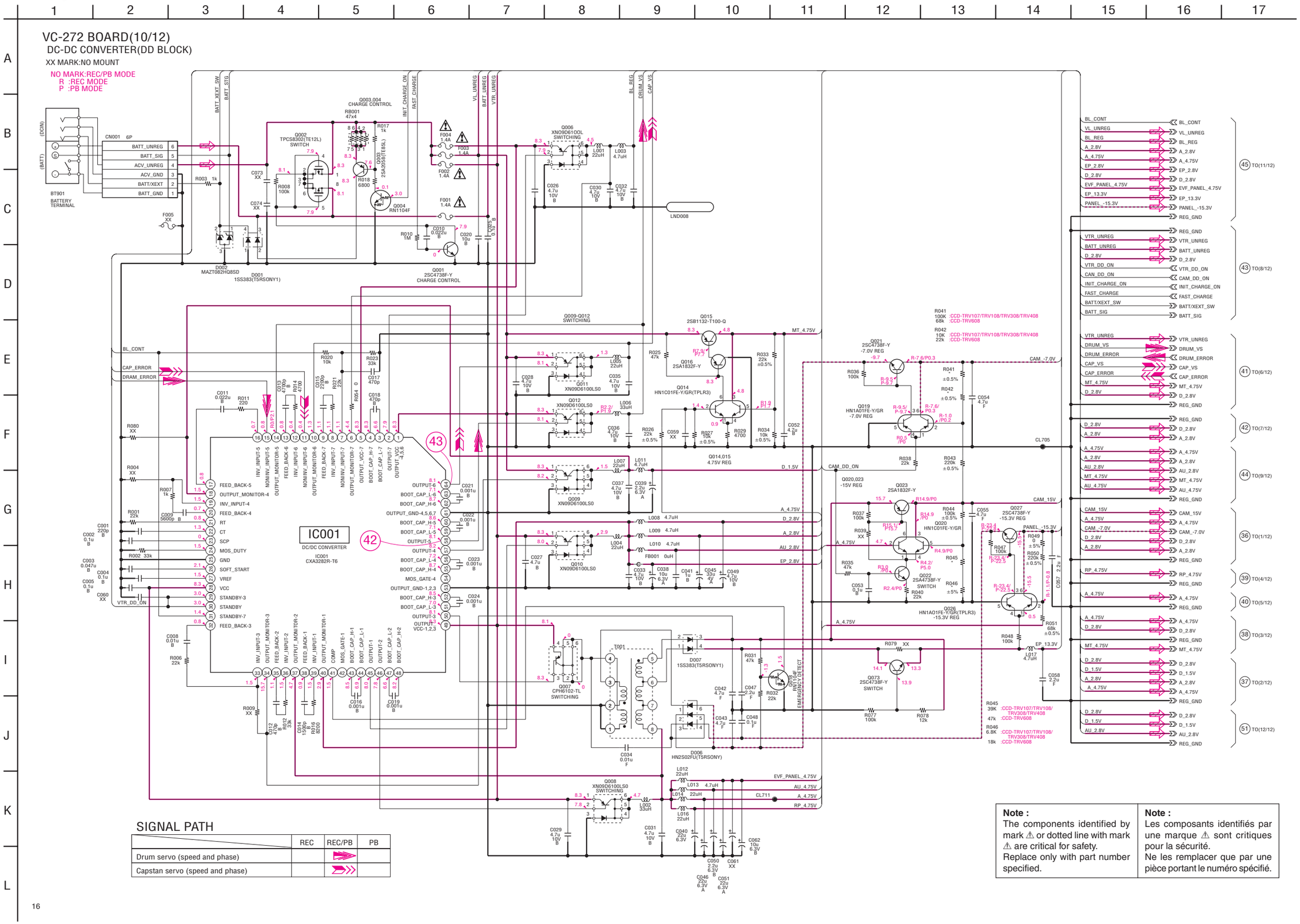


**Note :**
The components identified by mark ⚠ or dotted line with mark ⚠ are critical for safety.
Replace only with part number specified.

**Note :**
Les composants identifiés par une marque ⚠ sont critiques pour la sécurité.
Ne les remplacer que par une pièce portant le numéro spécifié.



**DC-DC CONVERTER**
**VC-272 (10/12)**

**For Schematic Diagram**

• Refer to page 4-31 for printed wiring board.

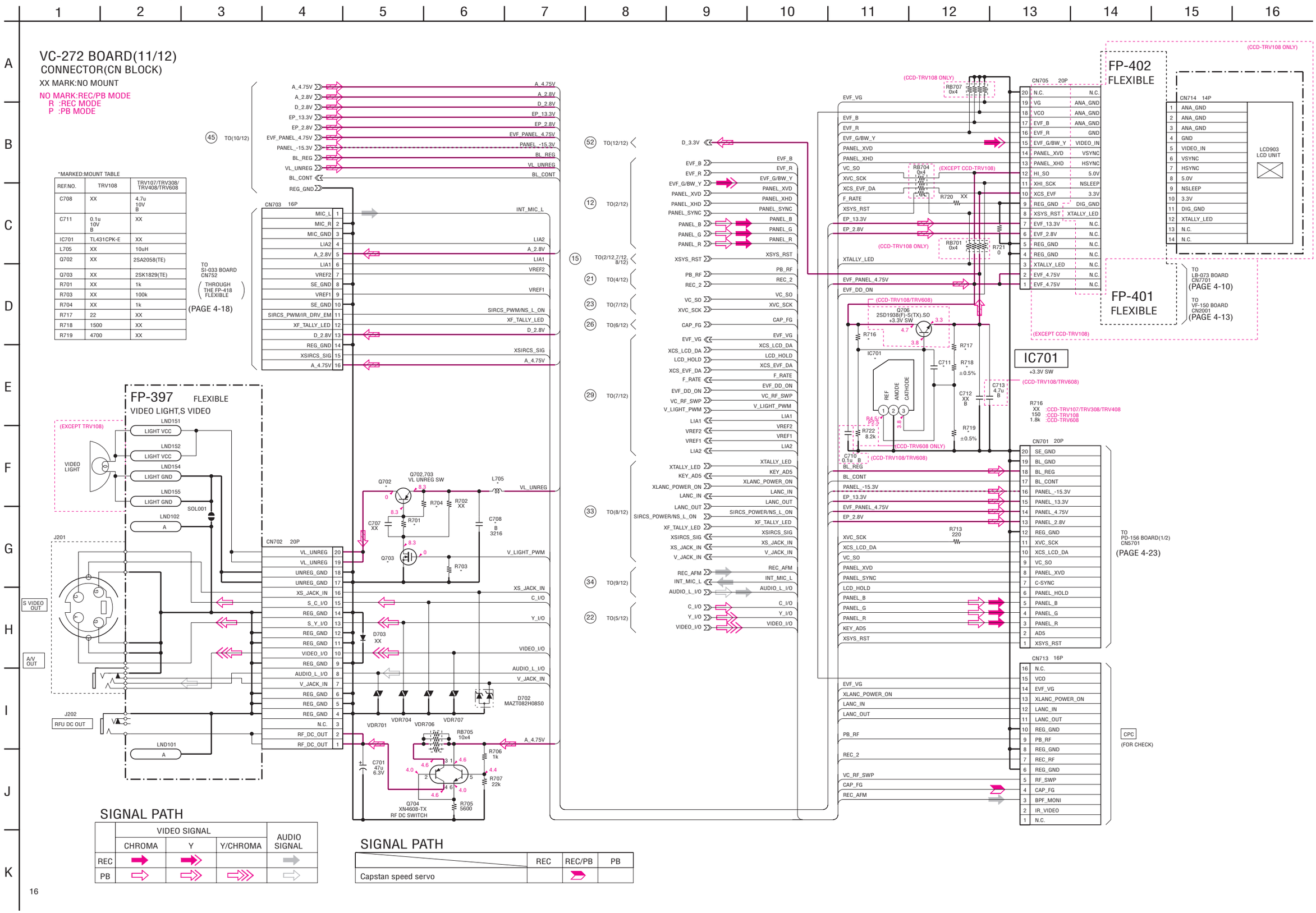




**CONNECTOR**
**VC-272 (11/12)**

**For Schematic Diagram**

• Refer to page 4-31 for printed wiring board.

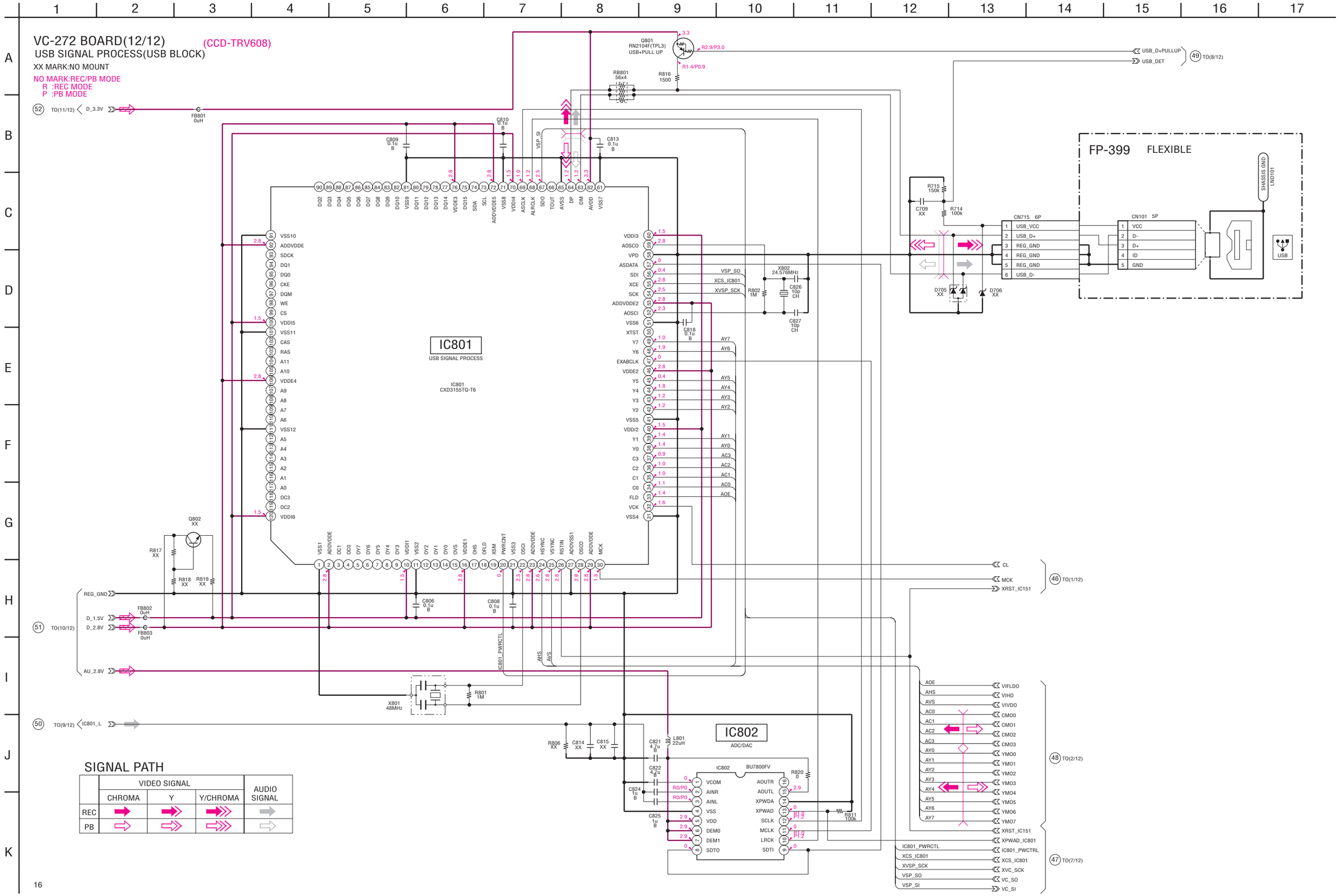








**USB SIGNAL PROCESS**
**VC-272 (12/12)**

**FP-397 FLEXIBLE BOARD**

# FP-397 FLEXIBLE

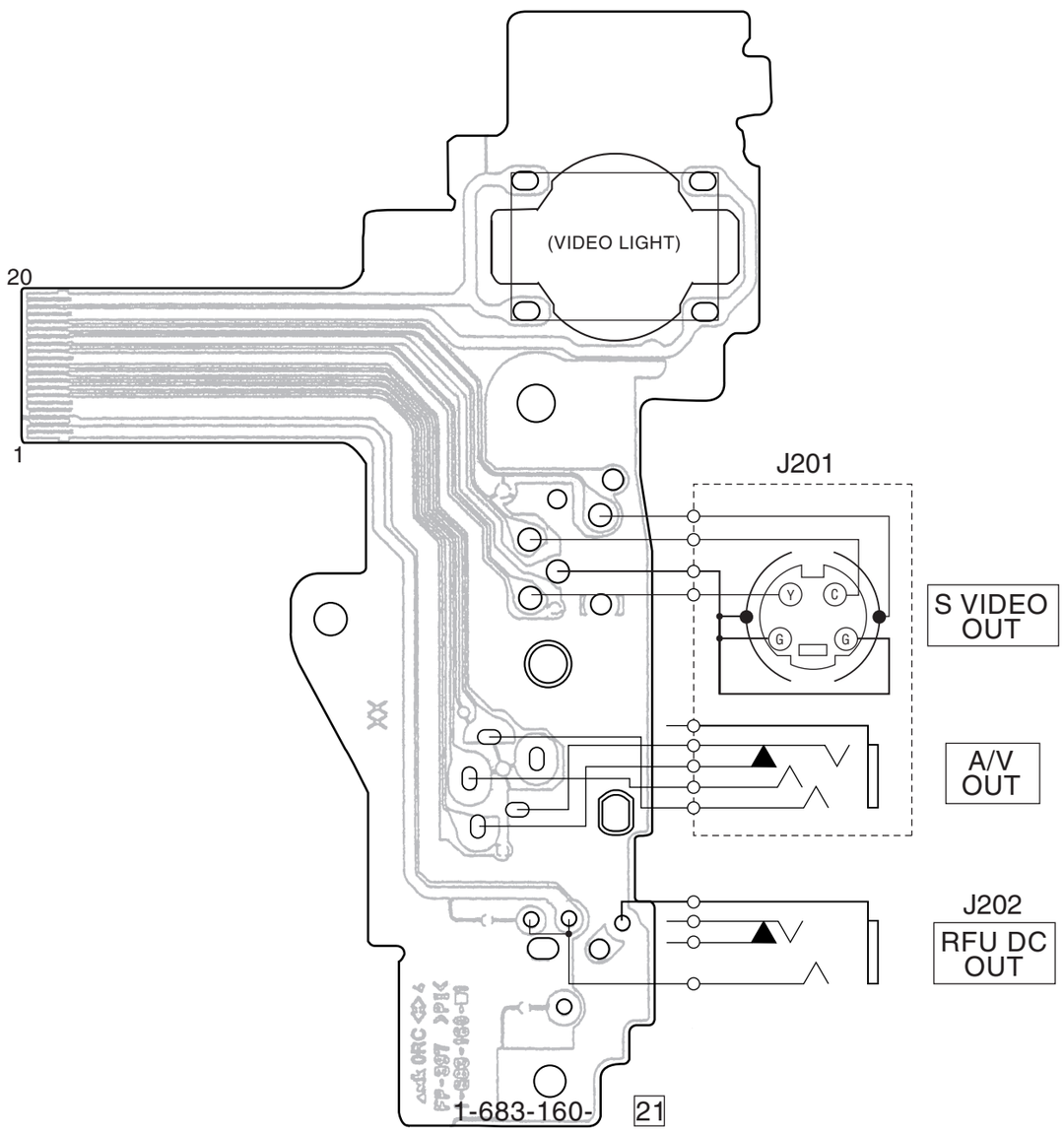


**For printed wiring board**

There are a few cases that the part printed on this diagram isn't mounted in this model.

## 4-3. WAVEFORMS

**CD-354** BOARD
CAMERA REC

① IC2191 ①

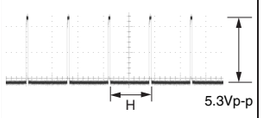


② IC2191 ②

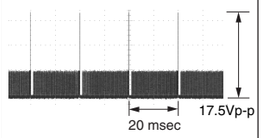


③ IC2191 ③

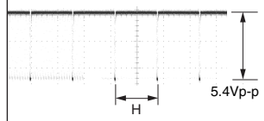


④ IC2191 ④

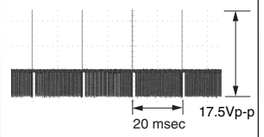


⑤ IC2191 ⑦

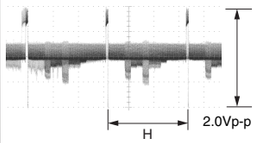


⑥ IC2191 ⑩

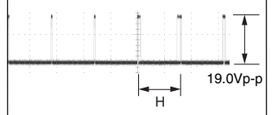


⑦ IC2191 ⑬⑭

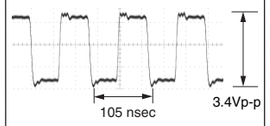


**VF-150** BOARD

① IC2001 ⑳

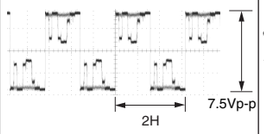


⑨ IC2002 ㊽

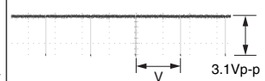


② IC2001 ㉒

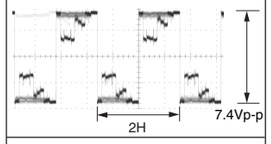


③ IC2001 ㉔

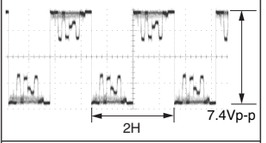


④ IC2001 ㊻

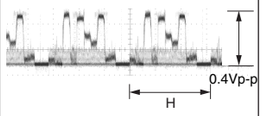


⑤ IC2001 ㊼

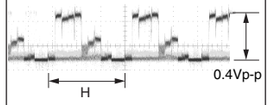


⑥ IC2001 ㊽

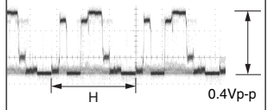


⑦ IC2002 ①

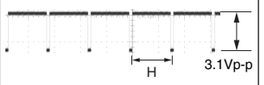


⑧ IC2002 ㉖

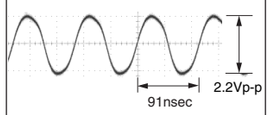

## PD-156 BOARD

① IC5501 ⑳

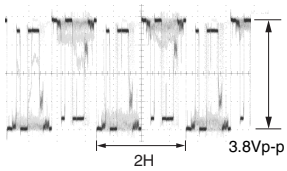


② IC5501 ㉒

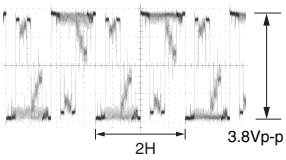


③ IC5501 ㉔

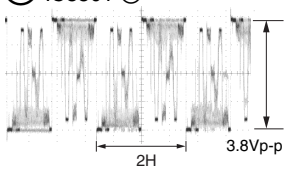


④ IC5501 ㊻

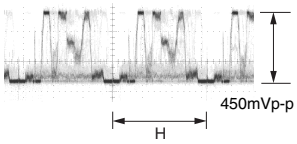


⑤ IC5501 ㊼

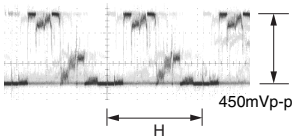


⑥ IC5501 ㊽

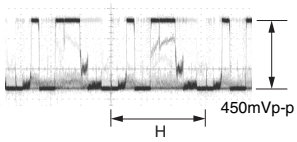


⑦ IC5502 ①

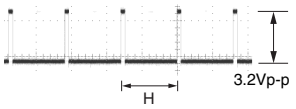


⑧ IC5502 ㉖

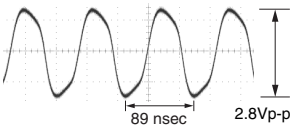


⑨ IC5502 ㊽

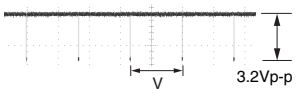


## VC-272 BOARD

① IC271 ⑤
REC/PB

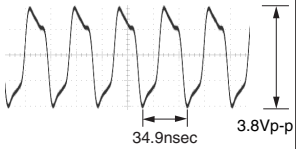


② IC271 ⑪
REC/PB

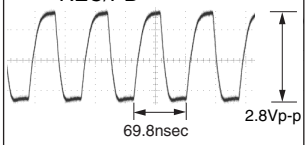


③ IC271 ㉑㉒
REC

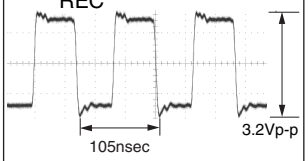


④ IC271 ㉕
REC

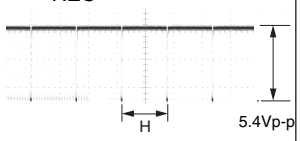


⑤ IC271 ㉖
REC

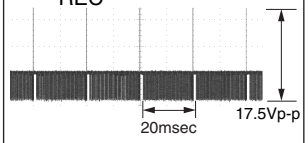


⑥ IC271 ㉘
REC

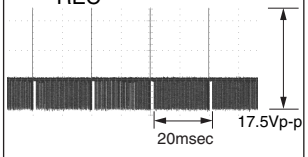


⑦ IC271 ㉛
REC

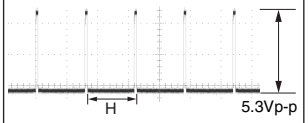


⑧ IC272 ⑯
REC/PB

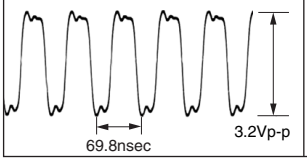


⑨ IC272 ㉚
REC

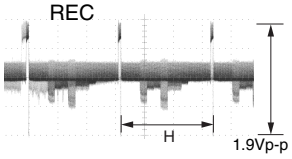


⑩ IC272 ㉞
PB

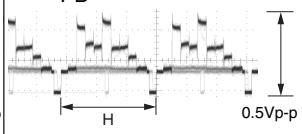


⑪ IC272 ㊱
PB

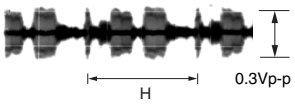


⑫ IC151 ㉓
REC/PB

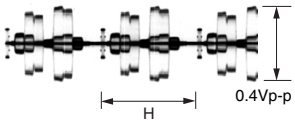


⑬ IC151 ④
REC/PB

⑭ IC151 ⑦
REC

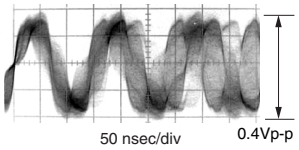


⑮ IC151 ⑭
REC/PB

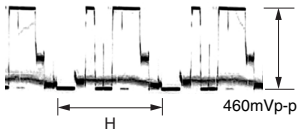


⑯ IC151 ⑰
REC/PB

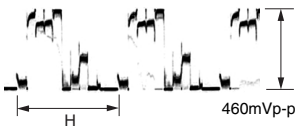

## VC-272 BOARD

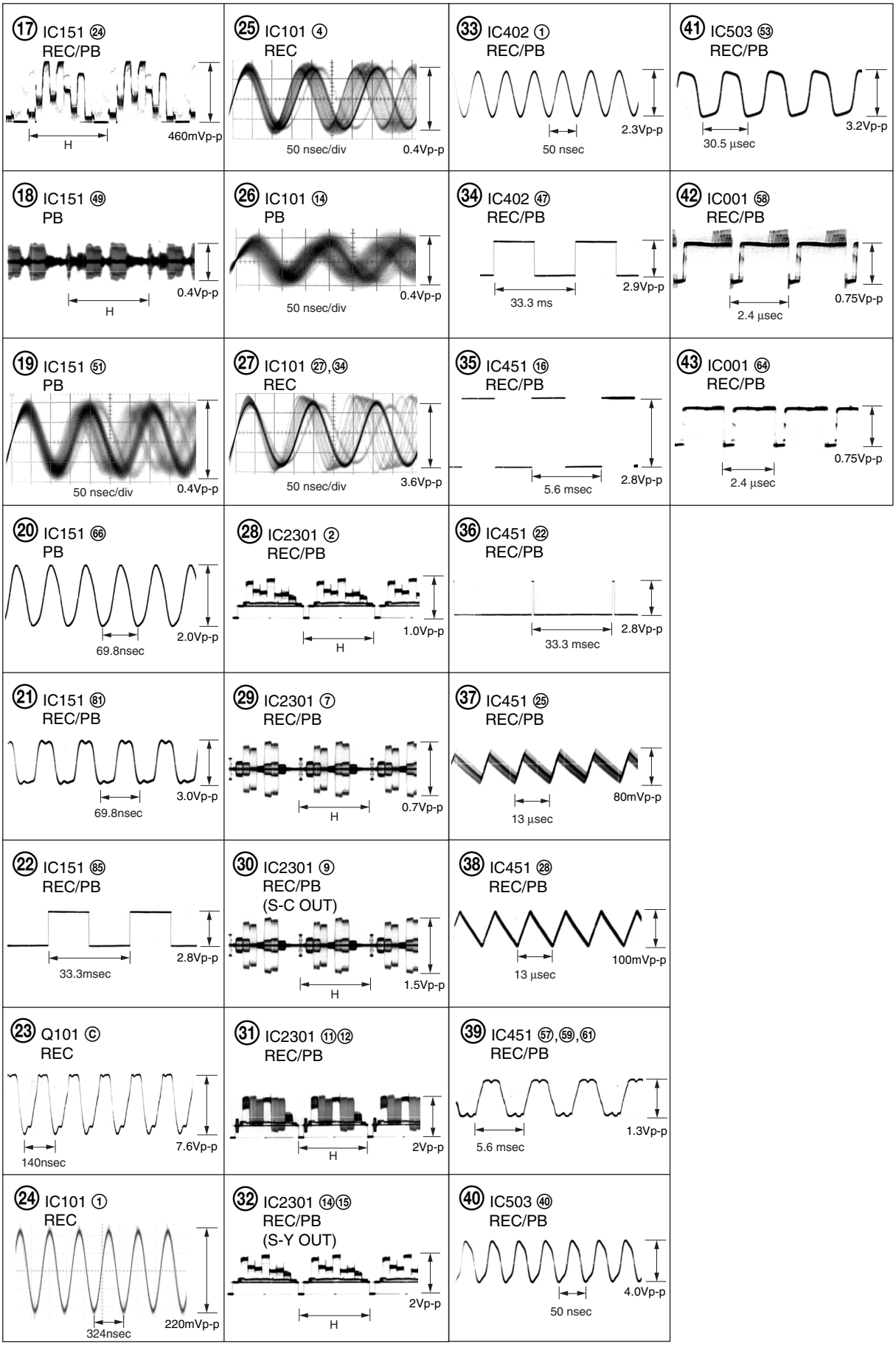
17 IC151 24
REC/PB
H
460mVp-p
25 IC101 4
REC
50 nsec/div
0.4Vp-p
33 IC402 1
REC/PB
50 nsec
2.3Vp-p
41 IC503 53
REC/PB
30.5 µsec
3.2Vp-p
18 IC151 49
PB
H
0.4Vp-p
26 IC101 14
PB
50 nsec/div
0.4Vp-p
34 IC402 47
REC/PB
33.3 ms
2.9Vp-p
42 IC001 58
REC/PB
2.4 µsec
0.75Vp-p
19 IC151 51
PB
50 nsec/div
0.4Vp-p
27 IC101 27,34
REC
50 nsec/div
3.6Vp-p
35 IC451 16
REC/PB
5.6 msec
2.8Vp-p
43 IC001 64
REC/PB
2.4 µsec
0.75Vp-p
20 IC151 66
PB
69.8nsec
2.0Vp-p
28 IC2301 2
REC/PB
H
1.0Vp-p
36 IC451 22
REC/PB
33.3 msec
2.8Vp-p
21 IC151 81
REC/PB
69.8nsec
3.0Vp-p
29 IC2301 7
REC/PB
H
0.7Vp-p
37 IC451 25
REC/PB
13 µsec
80mVp-p
22 IC151 85
REC/PB
33.3msec
2.8Vp-p
30 IC2301 9
REC/PB
(S-C OUT)
H
1.5Vp-p
38 IC451 28
REC/PB
13 µsec
100mVp-p
23 Q101 C
REC
140nsec
7.6Vp-p
31 IC2301 11,12
REC/PB
H
2Vp-p
39 IC451 57,59,61
REC/PB
5.6 msec
1.3Vp-p
24 IC101 1
REC
324nsec
220mVp-p
32 IC2301 14,15
REC/PB
(S-Y OUT)
H
2Vp-p
40 IC503 40
REC/PB
50 nsec
4.0Vp-p

## 4-4. MOUNTED PARTS LOCATION

no mark : side A
* mark : side B

### CD-354 BOARD

| | | |
|---|---|---|
| | C2191 | B-2 |
| * | C2194 | B-5 |
| * | C2195 | A-4 |
| | C2196 | B-2 |
| * | CN2191 | A-5 |
| | IC2191 | A-2 |
| * | L2191 | B-4 |
| * | Q2191 | A-4 |
| * | R2191 | A-5 |
| * | R2193 | B-5 |

### LB-073 BOARD

| | | |
|---|---|---|
| | CN7701 | B-1 |
| * | D7701 | A-3 |
| * | D7702 | A-3 |
| | IC7701 | A-2 |
| | Q7701 | A-1 |
| | Q7702 | A-2 |
| | R7701 | A-1 |
| | R7702 | A-1 |
| | R7703 | A-1 |
| | R7704 | A-1 |
| | R7705 | A-1 |
| | R7706 | A-1 |
| | TH7701 | A-2 |

### VF-150 BOARD

| | | |
|---|---|---|
| * | C2001 | B-4 |
| | C2002 | B-1 |
| | C2003 | B-1 |
| | C2004 | B-1 |
| | C2005 | B-1 |
| | C2006 | B-1 |
| * | C2007 | A-4 |
| * | C2008 | A-4 |
| | C2009 | A-1 |
| | C2010 | A-1 |
| * | C2011 | A-3 |
| * | C2012 | A-4 |
| | C2013 | A-2 |
| * | C2014 | A-4 |
| | C2015 | A-1 |
| | C2016 | A-1 |
| | C2017 | A-1 |
| | C2018 | A-1 |
| * | C2019 | A-4 |
| | C2020 | B-2 |
| * | CN2001 | A-4 |
| | CN2002 | A-2 |
| * | D2001 | A-4 |
| * | FB2001 | B-3 |
| * | FB2002 | A-3 |
| | IC2001 | A-1 |
| * | IC2002 | A-3 |
| * | L2001 | B-3 |
| * | L2002 | A-3 |
| | R2001 | B-1 |
| | R2002 | B-1 |
| * | R2003 | A-4 |
| | R2004 | B-1 |
| | R2005 | A-1 |
| | R2006 | A-1 |
| | R2007 | A-1 |
| | R2008 | A-1 |
| | R2009 | A-1 |
| | R2010 | A-1 |
| * | R2011 | A-4 |
| | R2012 | A-1 |
| | R2013 | A-1 |
| | R2014 | A-1 |
| * | R2015 | A-4 |
| | RB2001 | A-2 |
| * | RB2002 | A-3 |
| | RB2003 | B-1 |

### SI-033 BOARD

| | | |
|---|---|---|
| * | C750 | A-5 |
| * | C751 | B-4 |
| * | C752 | B-6 |
| * | C753 | A-6 |
| * | CN750 | C-4 |
| * | CN751 | B-4 |
| * | CN752 | B-5 |
| | D750 | A-1 |
| * | D751 | A-6 |
| | D752 | B-2 |
| * | FB753 | D-6 |
| * | FB754 | C-6 |
| * | FB755 | C-5 |
| * | FB756 | C-6 |
| | IC750 | A-3 |
| * | Q750 | A-6 |
| * | R750 | A-6 |
| * | R751 | A-6 |
| * | R752 | A-6 |
| * | R757 | A-6 |
| | SE750 | C-2 |
| | SE751 | D-1 |

### PD-156 BOARD

| | | |
|---|---|---|
| | C5501 | B-3 |
| | C5503 | B-3 |
| | C5504 | B-5 |
| | C5505 | B-4 |
| | C5506 | B-4 |
| | C5507 | B-4 |
| | C5508 | B-4 |
| | C5509 | B-2 |
| | C5510 | B-3 |
| | C5511 | B-4 |
| | C5512 | B-4 |
| | C5513 | B-3 |
| | C5514 | B-2 |
| | C5515 | B-4 |
| | C5516 | B-4 |
| | C5517 | C-3 |
| | C5518 | C-3 |
| | C5519 | C-3 |
| | C5520 | B-2 |
| | C5521 | C-5 |
| | C5522 | B-6 |
| | C5523 | D-5 |
| | C5524 | C-6 |
| | C5527 | B-3 |
| | C5528 | D-4 |
| | C5529 | B-4 |
| | C5530 | D-6 |
| | C5531 | D-6 |
| | C5532 | C-5 |
| | C5603 | D-3 |
| | C5604 | B-6 |
| | C5605 | B-6 |
| | C5606 | D-2 |
| | C5607 | D-4 |
| | C5608 | D-4 |
| | C5701 | A-3 |
| | CN5501 | D-5 |
| | CN5502 | B-3 |
| | CN5601 | D-2 |
| | CN5701 | B-1 |
| | CN5702 | A-1 |
| | CN5703 | A-5 |
| | CN5704 | A-2 |
| | CN5705 | A-6 |
| | D5502 | B-4 |
| | D5503 | D-5 |
| | D5504 | B-5 |
| | D5505 | B-3 |
| | D5601 | C-6 |
| * | D5602 | D-11 |
| | D5603 | B-1 |
| | D5604 | B-2 |
| * | D5605 | D-11 |
| | FB5501 | B-4 |
| | FB5502 | C-2 |
| | FB5503 | C-1 |
| | IC5501 | B-3 |
| | IC5502 | B-5 |
| | IC5601 | B-5 |
| | IC5602 | B-6 |
| | IC5701 | A-3 |
| | L5501 | B-3 |
| | L5502 | C-2 |
| | L5503 | B-4 |
| | L5601 | D-4 |
| | L5602 | D-4 |
| | Q5501 | B-4 |
| | Q5502 | C-6 |
| | Q5503 | C-6 |
| | Q5504 | C-5 |
| | Q5505 | B-5 |
| | Q5601 | B-5 |
| | Q5602 | D-4 |
| | Q5603 | B-6 |
| | Q5604 | D-4 |
| | R5501 | B-3 |
| | R5502 | B-3 |
| | R5503 | B-4 |
| | R5504 | B-4 |
| | R5505 | B-3 |
| | R5506 | B-4 |
| | R5507 | B-4 |
| | R5508 | B-4 |
| | R5509 | B-4 |
| | R5510 | B-4 |
| | R5511 | B-4 |
| | R5512 | B-4 |
| | R5513 | B-4 |
| | R5514 | C-5 |
| | R5515 | C-5 |
| | R5516 | B-3 |
| | R5517 | B-5 |
| | R5518 | B-5 |
| | R5519 | B-5 |
| | R5520 | B-5 |
| | R5521 | B-5 |
| | R5522 | C-3 |
| | R5523 | B-3 |
| | R5525 | D-5 |
| | R5526 | B-4 |
| | R5528 | C-6 |
| | R5529 | C-5 |
| | R5530 | B-6 |
| | R5531 | B-3 |
| | R5532 | B-6 |
| | R5533 | C-5 |
| | R5534 | B-4 |
| | R5539 | B-4 |
| | R5540 | C-5 |
| | R5541 | C-6 |
| | R5601 | D-3 |
| | R5602 | B-6 |
| | R5603 | B-6 |
| | R5604 | D-4 |
| | R5605 | B-6 |
| | R5606 | B-6 |
| | R5607 | C-6 |
| | R5608 | B-1 |
| | R5609 | B-2 |
| | R5612 | B-6 |
| | R5613 | A-6 |
| | R5614 | B-6 |
| | R5702 | B-1 |
| | R5703 | B-1 |
| | R5704 | A-3 |
| | RB5501 | C-3 |
| | RB5502 | C-5 |
| | RB5503 | C-5 |
| | T5601 | D-3 |

no mark : side A
* mark : side B

## VC-272 BOARD

| | | | | | | | | | | | | | | | |
|---|---|---|---|---|---|---|---|---|---|---|---|---|---|---|---|
| * C001 | G-12 | C128 | B-5 | C301 | G-4 | * C475 | C-15 | C2319 | D-1 | * IC601 | C-12 | * Q354 | D-17 | R158 | D-3 |
| * C002 | G-12 | * C129 | B-14 | C302 | G-4 | * C476 | C-15 | C2320 | D-1 | IC701 | D-7 | * Q355 | C-16 | R159 | D-3 |
| * C003 | G-12 | C130 | B-5 | C303 | G-3 | * C477 | B-15 | C2321 | C-2 | * IC801 | D-11 | Q451 | A-7 | R160 | D-3 |
| * C004 | G-12 | * C131 | B-14 | C304 | G-3 | * C478 | B-15 | C2322 | C-1 | IC802 | E-8 | Q501 | A-7 | R161 | D-2 |
| * C005 | G-12 | C132 | B-5 | C305 | G-4 | * C479 | B-15 | C2323 | C-1 | * IC901 | B-17 | Q502 | B-7 | R162 | D-3 |
| * C008 | F-11 | * C133 | B-14 | C306 | G-3 | * C480 | B-15 | C2324 | C-1 | * IC2301 | C-18 | Q503 | B-7 | R163 | C-3 |
| * C009 | G-12 | * C134 | B-14 | C307 | G-4 | * C481 | B-14 | * C2325 | C-17 | | | * Q702 | E-18 | R164 | D-3 |
| C010 | D-9 | C135 | B-4 | C308 | G-4 | * C482 | B-14 | * C2326 | D-18 | L001 | F-9 | * Q703 | E-17 | R165 | D-3 |
| * C011 | F-13 | C136 | B-4 | C309 | G-4 | * C483 | B-15 | | | L002 | F-8 | * Q704 | D-18 | R166 | D-3 |
| * C012 | F-11 | C151 | B-3 | C310 | F-6 | * C484 | C-15 | CN001 | C-9 | * L003 | F-10 | Q706 | E-7 | R167 | D-3 |
| * C013 | F-13 | C152 | E-3 | C311 | F-4 | * C485 | B-16 | CN101 | A-5 | L004 | G-8 | * Q801 | E-10 | R168 | B-3 |
| * C014 | F-11 | C153 | E-3 | C312 | G-3 | * C486 | A-15 | CN271 | F-5 | L005 | F-8 | * Q802 | C-11 | R169 | C-3 |
| * C015 | F-13 | C155 | B-3 | C313 | G-3 | * C487 | A-15 | CN301 | G-4 | L006 | F-8 | Q2301 | D-1 | R170 | B-3 |
| * C016 | F-11 | C156 | C-3 | C315 | F-3 | * C488 | B-15 | CN701 | C-3 | L007 | G-8 | Q2302 | D-1 | R171 | B-3 |
| * C017 | F-13 | C157 | C-3 | C317 | F-3 | * C489 | A-15 | * CN702 | E-18 | L008 | G-7 | Q2303 | D-1 | R172 | B-3 |
| * C018 | F-13 | C158 | B-3 | C318 | F-3 | * C490 | A-15 | CN703 | B-1 | L009 | G-7 | Q2304 | D-1 | R173 | C-3 |
| * C019 | F-11 | C160 | C-3 | C319 | G-4 | * C491 | A-15 | CN704 | A-1 | L010 | G-7 | * Q2305 | C-18 | R174 | C-3 |
| C020 | F-8 | C161 | C-3 | C320 | F-4 | * C492 | A-18 | CN705 | E-6 | * L011 | G-10 | | | R175 | B-3 |
| * C021 | E-12 | C162 | E-3 | * C352 | C-16 | * C501 | D-12 | CN706 | A-2 | * L012 | G-12 | * R001 | G-12 | R177 | E-3 |
| * C022 | E-12 | C163 | D-3 | * C354 | C-16 | * C502 | D-12 | CN707 | A-3 | * L013 | G-12 | * R002 | G-12 | R178 | E-3 |
| * C023 | E-12 | C164 | D-3 | * C355 | D-16 | C503 | D-7 | CN709 | B-6 | * L014 | G-12 | R003 | B-9 | R179 | D-3 |
| * C024 | E-12 | C165 | D-3 | * C356 | D-16 | C504 | D-7 | CN710 | G-7 | * L016 | G-11 | * R004 | G-12 | R180 | D-3 |
| C025 | F-8 | C166 | D-3 | C357 | C-2 | C505 | D-6 | CN711 | B-9 | L017 | E-6 | * R006 | F-11 | R181 | D-3 |
| * C026 | F-10 | C167 | D-3 | * C358 | D-16 | C506 | D-6 | CN712 | A-6 | * L101 | A-14 | * R007 | G-12 | R182 | D-3 |
| * C027 | G-11 | C168 | D-3 | * C359 | C-16 | C507 | D-6 | CN713 | D-9 | * L102 | B-13 | R008 | D-8 | R183 | D-3 |
| * C028 | F-10 | C169 | D-3 | * C363 | D-17 | C508 | D-6 | CN715 | E-8 | * L103 | B-13 | * R009 | F-11 | R184 | D-3 |
| * C029 | F-11 | C170 | C-3 | * C364 | C-17 | C509 | D-6 | | | * L104 | B-13 | R010 | D-8 | R185 | D-3 |
| * C030 | F-10 | C171 | C-3 | * C365 | D-16 | C510 | D-7 | D001 | D-8 | L151 | D-2 | * R011 | F-13 | R186 | D-3 |
| * C031 | F-11 | C172 | C-3 | C366 | D-2 | C511 | D-7 | D002 | B-8 | * L152 | E-16 | * R012 | F-11 | R187 | D-3 |
| * C032 | F-10 | C173 | C-3 | * C367 | D-16 | C512 | D-7 | D006 | F-7 | L154 | E-3 | * R014 | F-13 | R188 | D-3 |
| * C033 | G-11 | C174 | C-3 | * C369 | D-17 | C513 | B-7 | D007 | F-7 | L155 | B-3 | * R016 | F-11 | R189 | D-3 |
| C034 | F-7 | C175 | C-3 | * C371 | D-17 | C514 | C-8 | D151 | B-4 | L156 | C-4 | R017 | E-8 | R190 | D-3 |
| * C035 | F-10 | * C176 | D-15 | * C372 | D-17 | C515 | C-8 | D152 | B-3 | L157 | E-3 | R018 | E-8 | R191 | D-3 |
| * C036 | G-10 | C177 | C-3 | C374 | C-2 | C516 | C-8 | * D271 | F-15 | L271 | G-4 | * R020 | F-13 | R192 | D-3 |
| * C037 | G-11 | C178 | B-4 | * C375 | C-17 | C517 | C-8 | * D272 | F-15 | * L272 | G-15 | * R021 | F-13 | R193 | C-3 |
| C038 | F-7 | C179 | B-4 | * C376 | D-16 | * C518 | C-12 | D301 | G-3 | L301 | F-6 | * R023 | F-13 | R195 | B-3 |
| * C039 | G-10 | C182 | C-4 | * C380 | C-17 | * C602 | C-12 | D302 | G-5 | L303 | F-4 | * R025 | F-10 | R196 | C-3 |
| * C040 | G-11 | C183 | B-4 | * C381 | D-17 | * C603 | C-12 | * D501 | D-12 | L705 | E-3 | * R026 | F-11 | R197 | E-3 |
| C041 | F-7 | C184 | E-3 | * C382 | D-16 | C701 | E-3 | D502 | B-7 | L801 | E-7 | * R027 | F-11 | R198 | E-3 |
| C042 | F-7 | C185 | E-4 | * C383 | D-17 | * C707 | E-17 | * D503 | D-12 | * L901 | B-17 | * R029 | F-11 | R199 | C-4 |
| C043 | F-7 | C186 | C-3 | * C384 | D-17 | C708 | E-2 | D504 | A-7 | * L2301 | B-18 | R031 | F-7 | R200 | C-4 |
| C045 | F-7 | C187 | C-4 | * C385 | C-17 | * C709 | E-10 | D505 | C-6 | L2302 | E-1 | R032 | F-7 | R205 | E-2 |
| * C046 | G-12 | C188 | C-4 | * C386 | D-17 | C710 | D-7 | * D702 | E-18 | L2303 | E-1 | * R033 | F-10 | R206 | C-4 |
| C047 | F-7 | C190 | E-4 | * C389 | D-17 | C711 | E-7 | * D703 | E-18 | L2304 | D-1 | * R034 | F-11 | R208 | C-5 |
| C048 | F-7 | C192 | C-5 | * C390 | D-17 | C712 | E-7 | D705 | E-8 | L2305 | E-1 | R035 | E-7 | R210 | D-5 |
| C049 | F-7 | C194 | C-5 | * C392 | C-17 | C713 | E-7 | D706 | E-9 | | | R036 | F-7 | R212 | D-2 |
| * C050 | G-12 | C195 | D-5 | * C393 | C-17 | * C806 | D-11 | | | Q001 | D-8 | R037 | F-7 | R217 | E-2 |
| * C051 | G-12 | * C196 | D-13 | * C394 | D-17 | * C808 | D-11 | ET101 | B-4 | Q002 | D-8 | R038 | F-7 | * R251 | B-17 |
| * C052 | F-10 | C202 | C-4 | * C396 | D-17 | * C809 | D-10 | ET102 | B-6 | Q003 | E-8 | R039 | E-7 | * R253 | B-16 |
| C053 | E-7 | * C251 | B-17 | * C397 | C-18 | * C810 | D-10 | | | Q004 | D-8 | R040 | E-7 | * R254 | B-16 |
| C054 | F-6 | * C252 | B-17 | * C398 | C-16 | * C813 | E-10 | F001 | E-8 | * Q006 | F-10 | R041 | F-6 | * R255 | B-16 |
| C055 | E-7 | C253 | B-2 | C401 | A-9 | C814 | E-8 | F002 | E-9 | * Q007 | F-11 | R042 | F-7 | * R256 | A-16 |
| C057 | E-6 | * C254 | B-16 | * C402 | B-10 | C815 | E-8 | F003 | E-9 | * Q008 | F-11 | R043 | E-7 | * R271 | F-15 |
| C058 | E-6 | * C256 | B-16 | * C403 | B-10 | * C818 | E-11 | F004 | E-9 | * Q009 | G-10 | R044 | E-7 | * R274 | F-14 |
| * C059 | F-11 | * C257 | A-16 | * C404 | B-10 | C821 | E-7 | F005 | E-8 | * Q010 | G-11 | R045 | E-7 | * R275 | F-15 |
| * C060 | G-12 | * C259 | B-17 | * C405 | C-10 | C822 | E-8 | | | * Q011 | F-10 | R046 | E-7 | * R280 | F-14 |
| * C061 | G-12 | * C271 | F-15 | * C406 | C-11 | C824 | E-8 | FB001 | G-7 | * Q012 | G-10 | R047 | F-6 | * R281 | E-15 |
| * C062 | G-12 | * C272 | F-15 | * C407 | C-11 | C825 | E-8 | FB101 | A-5 | * Q014 | F-10 | R048 | E-6 | * R293 | F-14 |
| C073 | C-8 | * C273 | F-15 | * C408 | B-11 | * C826 | E-10 | FB102 | A-5 | * Q015 | F-10 | R049 | E-6 | * R294 | F-14 |
| C074 | C-8 | * C274 | F-15 | * C409 | A-11 | * C827 | E-11 | * FB271 | F-15 | * Q016 | F-11 | R050 | E-6 | R301 | G-4 |
| * C101 | A-14 | * C275 | F-15 | * C410 | B-11 | * C901 | B-17 | FB275 | E-4 | Q018 | F-7 | R051 | F-6 | R304 | G-3 |
| * C102 | A-14 | * C276 | F-14 | * C411 | B-11 | * C902 | B-17 | * FB601 | C-12 | Q019 | F-6 | * R054 | F-13 | * R306 | G-15 |
| * C103 | A-14 | * C277 | F-15 | * C451 | C-16 | * C903 | B-17 | * FB602 | C-13 | Q020 | E-7 | R077 | F-7 | R307 | G-3 |
| * C104 | B-14 | * C278 | F-14 | C452 | A-6 | * C904 | B-17 | * FB801 | E-10 | Q021 | F-6 | R078 | F-7 | R308 | G-4 |
| C105 | B-5 | * C279 | F-15 | * C453 | B-16 | * C905 | B-18 | * FB802 | C-11 | Q022 | E-7 | R079 | E-7 | R309 | G-4 |
| * C106 | B-14 | C280 | E-4 | * C454 | B-16 | C906 | B-1 | * FB803 | D-12 | Q023 | F-7 | * R080 | G-12 | R310 | G-4 |
| * C107 | B-14 | C281 | E-4 | * C455 | B-16 | * C908 | B-18 | | | Q026 | E-6 | R101 | B-5 | R311 | G-4 |
| C108 | B-5 | * C282 | F-15 | * C456 | C-16 | C910 | B-2 | * IC001 | F-12 | Q027 | F-6 | R102 | A-5 | R312 | G-4 |
| C109 | B-5 | * C283 | F-15 | * C457 | B-16 | * C911 | A-17 | IC101 | B-5 | Q073 | E-7 | R105 | A-5 | R313 | G-4 |
| C110 | B-5 | * C284 | F-14 | C458 | B-3 | * C913 | B-17 | IC151 | D-4 | Q101 | B-5 | * R106 | B-14 | R314 | G-4 |
| C111 | B-5 | * C285 | F-15 | * C459 | B-15 | C2301 | E-1 | * IC153 | D-13 | Q102 | A-5 | R107 | B-5 | R316 | G-4 |
| C112 | B-5 | C286 | E-4 | C460 | A-6 | C2302 | E-1 | * IC251 | B-16 | Q103 | B-5 | R108 | A-5 | R317 | G-4 |
| C113 | B-4 | C287 | E-4 | * C461 | B-15 | C2303 | E-1 | * IC271 | F-15 | * Q105 | B-14 | * R109 | B-14 | R318 | F-4 |
| C114 | B-5 | C288 | F-4 | * C462 | B-15 | C2304 | E-1 | IC272 | F-4 | * Q107 | B-14 | * R110 | B-14 | R319 | F-3 |
| C115 | B-5 | C289 | F-4 | * C463 | B-15 | C2305 | E-1 | IC301 | G-5 | Q151 | B-3 | * R111 | B-14 | R321 | F-3 |
| C116 | B-4 | C290 | F-4 | C464 | A-7 | C2306 | E-1 | IC302 | F-3 | Q152 | E-3 | R112 | B-5 | R322 | F-3 |
| C117 | B-5 | C291 | F-4 | * C465 | C-16 | C2307 | E-1 | * IC351 | C-17 | Q153 | D-3 | R113 | B-5 | R323 | G-3 |
| * C119 | C-14 | C292 | F-4 | * C466 | C-15 | C2308 | E-1 | * IC352 | D-16 | Q154 | D-3 | R115 | B-5 | * R351 | C-16 |
| * C121 | B-13 | C293 | F-4 | * C467 | B-16 | C2310 | E-1 | IC401 | A-8 | Q155 | D-3 | R116 | B-4 | * R353 | D-16 |
| C122 | B-4 | C294 | F-4 | * C468 | C-15 | C2311 | E-1 | * IC402 | B-10 | Q156 | D-3 | R117 | B-5 | * R356 | D-16 |
| * C123 | B-13 | C295 | F-4 | * C469 | B-16 | * C2312 | B-18 | * IC451 | B-15 | Q157 | D-3 | R118 | B-4 | * R363 | D-17 |
| C124 | B-4 | C296 | F-4 | * C470 | C-15 | C2315 | D-1 | * IC452 | A-15 | Q159 | E-2 | R154 | C-3 | * R364 | D-16 |
| C125 | B-5 | C297 | F-4 | * C471 | B-15 | C2316 | D-1 | * IC502 | D-12 | Q301 | G-3 | R155 | C-3 | * R365 | D-16 |
| C126 | B-5 | * C298 | F-14 | * C472 | C-15 | C2317 | D-1 | IC503 | C-7 | Q302 | G-4 | R156 | D-3 | * R368 | C-17 |
| C127 | B-5 | * C299 | F-14 | * C473 | C-15 | C2318 | D-1 | * IC504 | D-12 | Q303 | G-4 | R157 | D-3 | * R372 | C-17 |

— Continued on next page —

no mark : side A
* mark : side B

**VC-272 BOARD**

| | | |
|---|---|---|
| * | R373 | D-17 |
| * | R379 | D-17 |
| * | R382 | C-16 |
| * | R387 | D-16 |
| * | R388 | D-16 |
| * | R391 | D-16 |
| * | R401 | B-10 |
| * | R402 | B-10 |
| * | R404 | C-10 |
| * | R417 | B-11 |
| | R428 | B-8 |
| * | R430 | C-11 |
| * | R439 | C-11 |
| * | R440 | B-11 |
| * | R441 | C-11 |
| * | R442 | C-11 |
| | R451 | B-4 |
| | R452 | B-4 |
| | R457 | A-6 |
| * | R458 | B-16 |
| * | R459 | B-16 |
| * | R460 | B-16 |
| | R461 | B-6 |
| | R462 | B-6 |
| | R464 | A-6 |
| | R465 | A-7 |
| * | R466 | C-15 |
| * | R467 | C-15 |
| * | R468 | B-15 |
| * | R469 | B-15 |
| * | R470 | C-15 |
| * | R471 | B-15 |
| * | R472 | B-15 |
| * | R474 | B-15 |
| * | R480 | C-15 |
| * | R481 | B-15 |
| * | R482 | B-16 |
| * | R483 | A-15 |
| * | R484 | A-15 |
| * | R485 | A-15 |
| * | R486 | A-15 |
| | R502 | B-7 |
| * | R503 | D-12 |
| | R507 | D-7 |
| | R508 | D-7 |
| | R518 | D-7 |
| | R519 | D-7 |
| | R520 | D-7 |
| | R521 | D-7 |
| | R525 | B-7 |
| | R542 | B-7 |
| | R543 | B-7 |
| | R552 | C-8 |
| | R554 | C-8 |
| | R558 | C-8 |
| * | R559 | D-12 |
| | R561 | B-8 |
| | R562 | B-7 |
| | R565 | B-6 |
| | R567 | B-7 |
| | R568 | B-7 |
| | R569 | D-6 |
| * | R611 | C-11 |
| * | R612 | B-11 |
| * | R613 | B-11 |
| * | R614 | B-11 |
| * | R701 | E-17 |
| * | R702 | E-17 |
| * | R703 | E-17 |
| * | R704 | E-17 |
| * | R705 | E-17 |
| * | R706 | D-17 |
| * | R707 | E-18 |
| | R713 | C-2 |
| * | R714 | E-10 |
| * | R715 | E-10 |
| | R716 | E-7 |
| | R717 | E-7 |
| | R718 | E-7 |
| | R719 | E-7 |
| | R720 | E-6 |
| | R721 | D-6 |
| | R722 | E-7 |
| * | R801 | E-11 |
| * | R802 | E-10 |
| | R806 | E-8 |
| | R811 | D-8 |
| * | R816 | D-10 |
| * | R817 | C-11 |
| * | R818 | C-11 |
| * | R819 | C-11 |
| | R820 | E-7 |
| * | R905 | B-17 |
| * | R906 | B-17 |
| * | R907 | A-17 |
| * | R908 | A-17 |
| * | R909 | A-17 |
| | R2301 | E-2 |
| | R2302 | E-1 |
| * | R2307 | C-18 |
| | R2310 | D-1 |
| | R2311 | D-1 |
| | R2312 | D-1 |
| | R2313 | D-1 |
| | R2314 | D-1 |
| | R2315 | D-2 |
| | R2316 | D-1 |
| | R2317 | D-1 |
| | R2318 | D-1 |
| | R2319 | D-1 |
| | R2320 | D-1 |
| | R2321 | D-1 |
| | RB001 | E-8 |
| | RB101 | B-5 |
| | RB102 | B-4 |
| | RB151 | B-3 |
| | RB272 | F-4 |
| | RB302 | G-3 |
| * | RB351 | D-17 |
| * | RB352 | D-17 |
| * | RB353 | D-16 |
| * | RB401 | A-10 |
| * | RB402 | C-11 |
| * | RB403 | B-11 |
| * | RB404 | A-11 |
| | RB407 | B-8 |
| * | RB408 | B-10 |
| * | RB409 | B-10 |
| | RB451 | B-4 |
| | RB452 | B-6 |
| | RB501 | C-6 |
| | RB502 | C-6 |
| | RB503 | C-6 |
| | RB504 | D-6 |
| | RB505 | D-6 |
| | RB506 | D-6 |
| | RB507 | D-7 |
| | RB508 | D-7 |
| | RB509 | B-8 |
| | RB510 | C-8 |
| | RB511 | C-8 |
| | RB512 | B-7 |
| | RB513 | D-7 |
| | RB514 | A-7 |
| | RB701 | E-6 |
| | RB704 | D-6 |
| * | RB705 | D-17 |
| | RB707 | E-6 |
| * | RB801 | E-10 |
| * | RB901 | B-18 |
| * | RB902 | B-18 |
| | RB2301 | D-1 |
| | RB2302 | D-1 |
| | RB2303 | C-1 |
| | T001 | F-8 |
| * | VDR701 | E-18 |
| * | VDR704 | E-18 |
| * | VDR706 | E-18 |
| * | VDR707 | E-18 |
| * | X271 | F-16 |
| * | X401 | C-10 |
| | X501 | B-7 |
| | X502 | B-8 |
| * | X801 | E-12 |
| * | X802 | E-11 |

# SECTION 5
# ADJUSTMENTS

## 1. Adjusting items when replacing main parts and boards.

When replacing main parts, adjust the items indicated by ● in the following table.

| Adjustment Section | Adjustment | Replaced parts | | | | | | | | | | | | | | | | | | | | | |
|---|---|---|---|---|---|---|---|---|---|---|---|---|---|---|---|---|---|---|---|---|---|---|---|
| | | Block replacement | | | | | | | | Parts replacement | | | | | | | | | | | | | |
| | | Lens device | Video light *2 | LCD block ND901 (Fluorescent tube) | LCD block LCD901 (LCD panel) | EVF block LCD903 (LCD panel) | Mechanism deck *1 | Mechanism deck M901 (Drum assy.) *1 | Mechanism deck M902 (Capstan motor) | CD-354 board IC2191 (CCD imager) | VC-272 board IC271, X271 (Timing generator) | VC-272 board IC272 (S/H, AGC) | VC-272 board IC151 (Camera, video process) | VC-272 board IC101 (REC/PB AMP) | VC-272 board IC2301 (Video out) | VC-272 board IC601 (EVR) | VC-272 board IC351 (Audio process) | SI-033 board SE750, 751 (PITCH,YAW sensor) *3 | PD-156 board IC5501 (RGB driver (LCD)) | PD-156 board IC5502 (Timing generator (LCD)) | VF-150 board IC2001 (RGB driver (EVF)) *4 | VF-150 board IC2002 (Timing generator (EVF)) *4 | LB-073 board D7702 (Back light LED (EVF)) *4 |
| Initialization of D, E, F, 7 page data | Initialization of D, E, F, 7 page data | | | | | | | | | | | | | | | | | | | | | | |
| | Modification of D, E, F, 7 page data | | | | | | | | | | | | | | | | | | | | | | |
| Camera | HALL adj. | ● | | | | | | | | | | | | | | | | | | | | | |
| | Flange back adj. | ● | | | | | | | | ● | | | | | | | | | | | | | |
| | Color reproduction adj. | | | | | | | | | ● | | ● | | | | | | | | | | | |
| | AWB & LV standard data input | | | | | | | | | ● | | ● | | | | | | | | | | | |
| | Auto white balance adj. | | | | | | | | | ● | | ● | | | | | | | | | | | |
| | Steady shot check *3 | | | | | | | | | | | | | | | | | ● | | | | | |
| EVF | RGB AMP adj. *4 | | | | | | | | | | | | | | | | | | | | ● | | |
| | Contrast adj. *4 | | | | | | | | | | | | | | | | | | | | ● | | |
| LCD | VCO adj. | | | | | | | | | | | | | | | | | | ● | ● | | | |
| | RGB AMP adj. | | | | | | | | | | | | | | | | | | ● | | | | |
| | Contrast adj. | | | | | | | | | | | | | | | | | | ● | | | | |
| | COM-AMP adj. | | | | | | | | | | | | | | | | | | ● | | | | |
| | V-COM adj. | | | | ● | | | | | | | | | | | | | | ● | | | | |
| | White balance adj. | | | ● | ● | | | | | | | | | | | | | | ● | | | | |
| Servo | CAP FG offsett adj. | | | | | | ● | | ● | | | | | | | | | | | | | | |
| | Switching position adj. | | | | | | ● | ● | | | | | | | | | | | | | | | |
| Video | 28MHz origin oscillation adj. | | | | | | | | | | ● | | | | | ● | | | | | | | |
| | AFC fo adj. | | | | | | | | | | | | ● | | | | | | | | | | |
| | Y OUT level adj. | | | | | | | | | | | | ● | | ● | | | | | | | | |
| | C OUT level adj. | | | | | | | | | | | | ● | | ● | | | | | | | | |
| | REC Y current adj. | | | | | | | | | | | | ● | ● | | | | | | | | | |
| | REC C/AFM current adj. | | | | | | | | | | | | ● | ● | | | | | | | | | |
| Audio | 1.5MHz deviation adj. | | | | | | | | | | | | | | | | ● | | | | | | |
| | BPF fo adj. | | | | | | | | | | | | | | | | ● | | | | | | |
| Mechanism | Tape path adj. | | | | | | ● | ● | ● | | | | | | | | | | | | | | |

*Table. 5-1-1 (1).*

| Adjustment Section | Adjustment | Board replacement | | | | EEPROM | |
|---|---|---|---|---|---|---|---|
| | | VC-272 board (COMPLETE) | SI-033 board (COMPLETE) | PD-156 board (COMPLETE) | VF-150 board (COMPLETE) *4 | VC-272 board IC401 | Supporting RadarW |
| Initialization of D, E, F, 7 page data | Initialization of D, E, F, 7 page data | | | | | ● | |
| | Modification of D, E, F, 7 page data | ● | | | | ● | |
| Camera | HALL adj. | ● | | | | ● | ● |
| | Flange back adj. | ● | | | | ● | ● |
| | Color reproduction adj. | ● | | | | ● | |
| | AWB & LV standard data input | ● | | | | ● | ● |
| | Auto white balance adj. | ● | | | | ● | ● |
| | Steady shot check *3 | ● | ● | | | ● | ● |
| EVF | RGB AMP adj. *4 | ● | | | ● | ● | ● |
| | Contrast adj. *4 | ● | | | ● | ● | ● |
| LCD | VCO adj. | ● | | ● | | ● | |
| | RGB AMP adj. | ● | | ● | | ● | |
| | Contrast adj. | ● | | ● | | ● | |
| | COM-AMP adj. | ● | | ● | | ● | |
| | V-COM adj. | ● | | ● | | ● | |
| | White balance adj. | ● | | ● | | ● | |
| Servo | CAP FG offsett adj. | ● | | | | ● | ● |
| | Switching position adj. | ● | | | | ● | |
| Video | 28MHz origin oscillation adj. | | | | | ● | |
| | AFC fo adj. | | | | | ● | ● |
| | Y OUT level adj. | | | | | ● | |
| | C OUT level adj. | | | | | ● | |
| | REC Y current adj. | | | | | ● | |
| | REC C/AFM current adj. | | | | | ● | |
| Audio | 1.5MHz deviation adj. | | | | | ● | |
| | BPF fo adj. | | | | | ● | |
| Mechanism | Tape path adj. | | | | | | |

*Table. 5-1-1 (2).*

*1: When replacing the drum assy. or mechanism deck, reset the data of page: 2, address: A2 to A4 to “00”. (Refer to “Record of Use check” of “5-4. SERVICE MODE”)

*2: Video light model (CCD-TRV107/TRV308/TRV408/TRV608).
When replacing the video light, reset the data of page:2, address: E0 to E2 to “00”.

*3: Steady shot model (CCD-TRV308/TRV408/TRV608)

*4: EVF TYPE S model (CCD-TRV107/TRV308/TRV408/TRV608)

# 5-1. CAMERA SECTION ADJUSTMENT

## 1-1. PREPARATIONS BEFORE ADJUSTMENT (CAMERA SECTION)

### 1-1-1. List of Service Tools

- Oscilloscope
- Color monitor
- Vectorscope
- Regulated power supply
- Digital voltmeter

| Ref. No. | Name | Parts Code | Usage |
|---|---|---|---|
| J-1 | Filter for color temperature correction (C14) | J-6080-058-A | Auto white balance adjustment/check<br>White balance adjustment/check |
| J-2 | ND filter 1.0 | J-6080-808-A | White balance check |
| | ND filter 0.4 | J-6080-806-A | White balance check |
| | ND filter 0.1 | J-6080-807-A | White balance check |
| J-3 | Pattern box PTB-450 | J-6082-200-A | |
| J-4 | Color chart for pattern box | J-6020-250-A | |
| J-5 | Adjustment remote commander (RM-95 upgraded) (Note) | J-6082-053-B | |
| J-6 | Siemens star chart | J-6080-875-A | For checking the flange back |
| J-7 | Clear chart for pattern box | J-6080-621-A | |
| J-8 | Multi CPC jig | J-6082-311-A | For adjusting the LCD block |
| J-9 | CPC jig connector | J-6082-539-A | For connecting the adjustment remote commander |
| J-10 | Minipattern box | J-6082-353-B | For adjusting the flange back |
| J-11 | Camera base | J-6082-384-A | For adjusting the flange back |
| J-12 | I/F unit for LANC control | J-6082-521-A | For connecting the adjustment remote commander |

**Note:** If the micro processor IC in the adjustment remote commander is not the new micro processor (UPD7503G-C56-12), the pages cannot be switched. In this case, replace with the new micro processor (8-759-148-35).

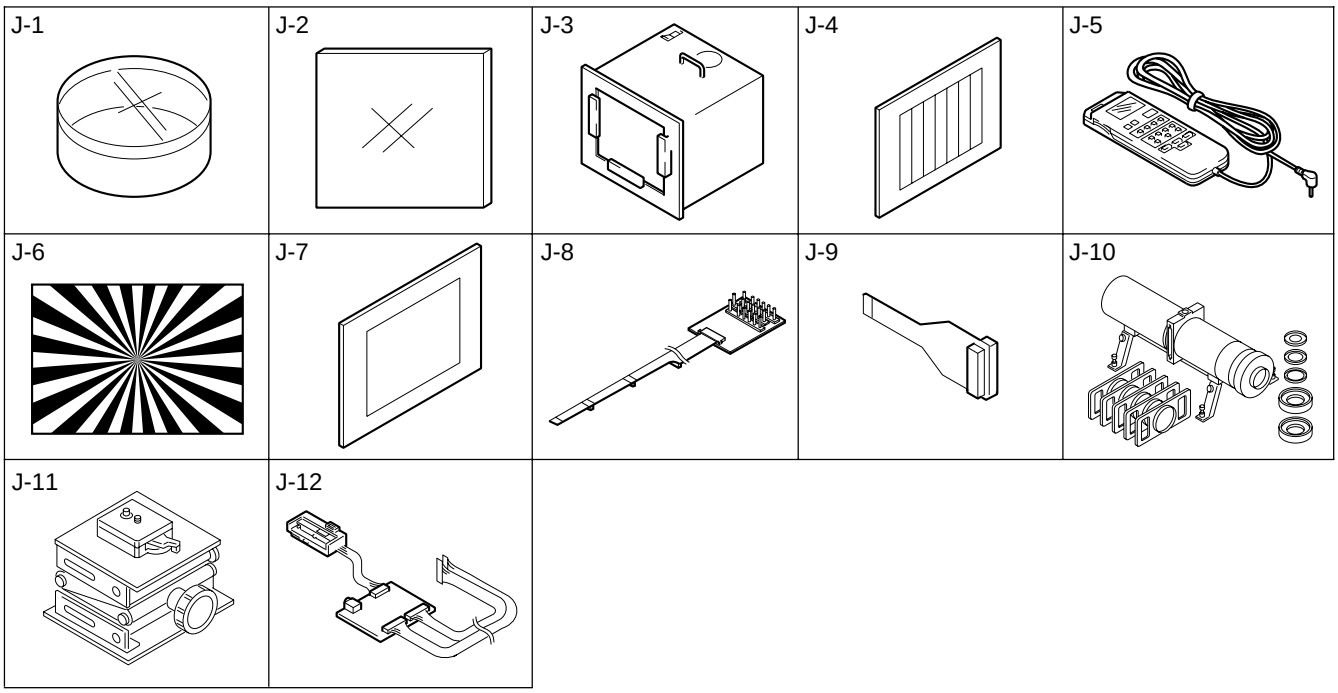


*Fig. 5-1-1.*

### 1-1-2. Preparations

**Note1:** For details of how remove the cabinet and boards, refer to "2. DISASSEMBLY".

**Note2:** When performing only the adjustments, the lens block and boards need not be disassembled.

1) Connect the equipment for adjustments according to Fig. 5-1-4.
2) Connect the adjustment remote commander to CN713 of VC-272 board via the I/F unit for LANC control (J-6082-521-A) and CPC jig connector (J-6082-539-A). To operate the adjustment remote commander, connect the AC power adapter to the DC IN jack of I/F unit for LANC control, or connect the L series Info-LITHIUM battery to the battery terminal of I/F unit for LANC control. (Fig. 5-1-3.)
3) The front panel block (SI-033 board, microphone unit, video light) need not be assembled except during the steady shot operation check.

**Note3:** As removing the cabinet (R) (removing the VC-272 board CN709) means removing the lithium 3V power supply (CF-2000 block BT001), data such as date, time, user-set menus will be lost. After completing adjustments, reset these data. If the cabinet (R) has been removed, the self-diagnosis data, data on history of use (total drum rotation time etc.) will be lost. Before removing, note down the self-diagnosis data (data of page: 2, address: B0 to C6) and data on history use (data of page: 2, address: A2 to AA and E0 to E2). (Refer to "5-4. Service Mode" for the self-diagnosis data and data on the history use.)

**Note4:** Setting the "Forced Camera Power ON" Mode
1) Select page: 0, address: 01, and set data: 01.
2) Select page: D, address: 10, set data: 01, and press the PAUSE button.
The above procedure will enable the camera power to be turned on with the SS-2000 block removed. After completing adjustments, be sure to exit the "Forced Camera Power ON Mode".

**Note5:** Exiting the "Forced Camera Power ON" Mode
1) Select page: 0, address: 01, and set data: 01.
2) Select page: D, address: 10, set data: 00, and press the PAUSE button.
3) Select page: 0, address: 01, and set data: 00.

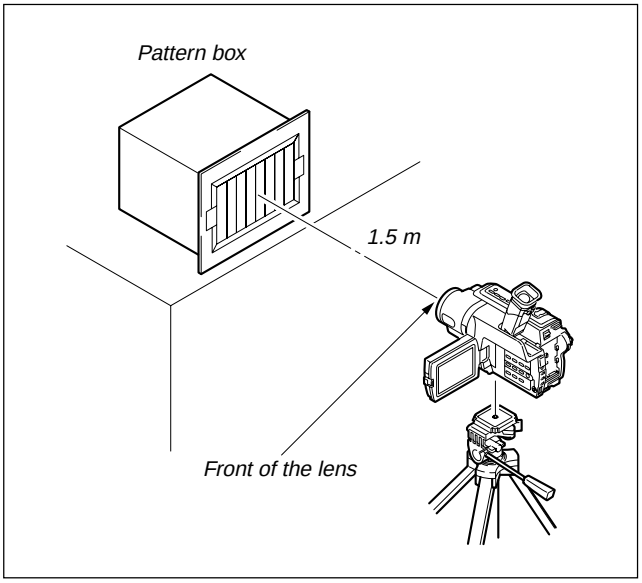


*Fig. 5-1-2.*

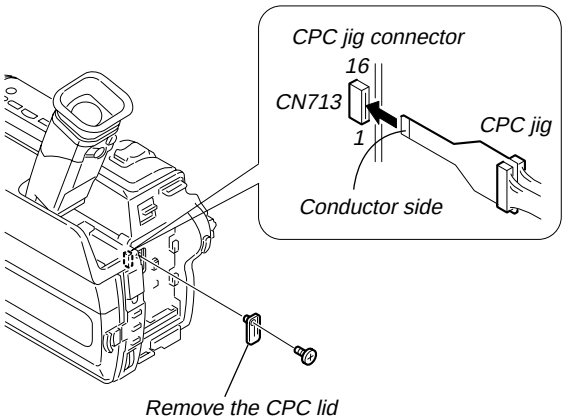


*Fig. 5-1-3.*

**Note:** Use either a AC power adaptor or a Info-LITHIUM battery as the power supply of the I/F unit for LANC control.

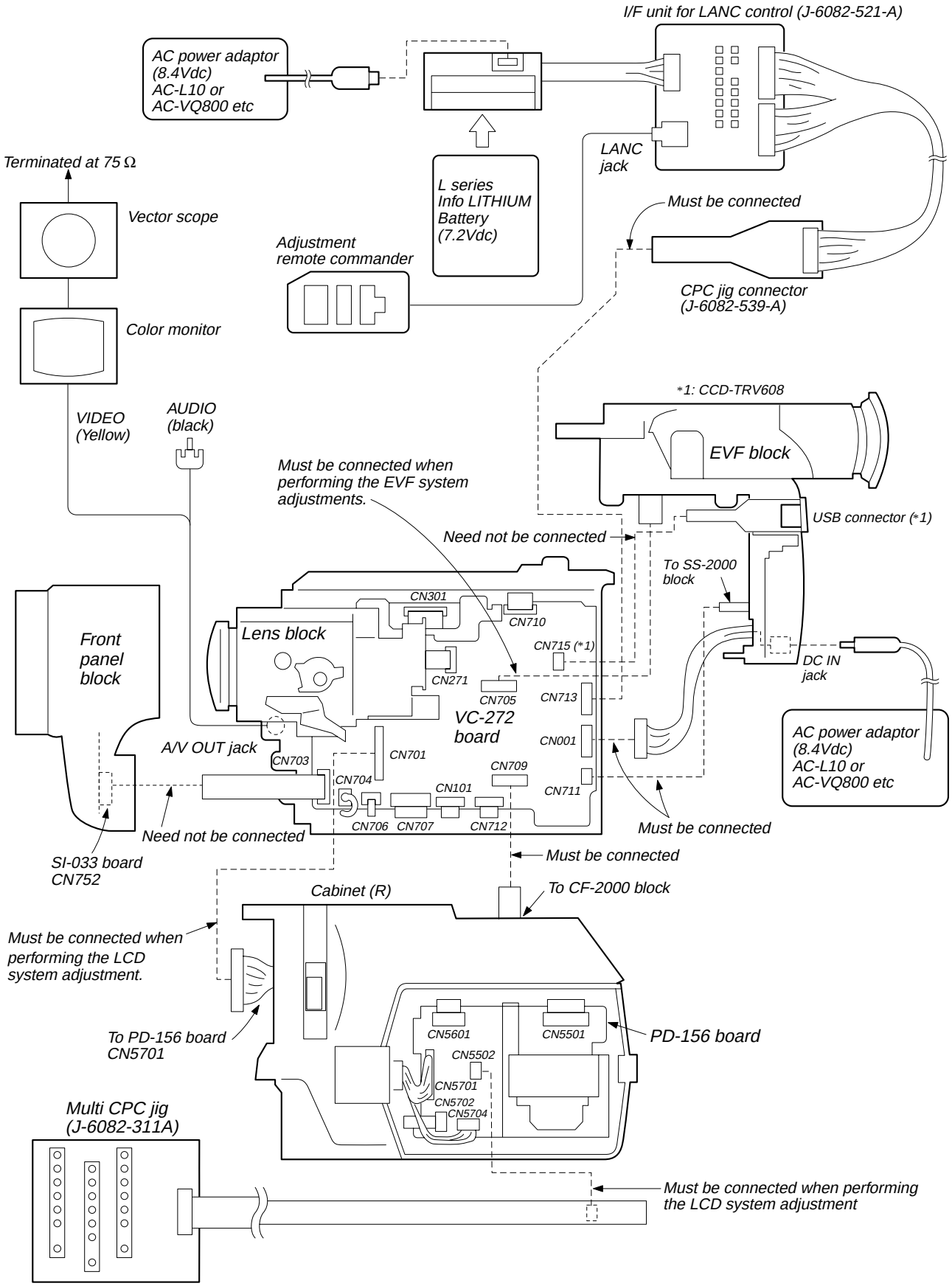


*Fig. 5-1-4.*

### 1-1-3. Precaution

#### 1. Setting the Switch

Unless otherwise specified, set the switches as follows and perform adjustments without loading cassette.

1. POWER switch (SS-2000 block) ..... CAMERA
2. NIGHT SHOT switch (Lens block) ..... OFF
3. LIGHT switch (FK-2000 block) *1 ..... OFF
4. DEMO MODE (Menu display) ..... OFF
5. DIGITAL ZOOM (Menu display) ..... OFF
6. STEADY SHOT (Menu display) *2 ..... OFF
7. DISPLAY (Menu display) ..... V-OUT/LCD
8. DISPLAY (CF-2000 block) ..... ON
9. FOCUS switch (CF-2000 block) ..... MANUAL
10. BACK LIGHT (CF-2000 block) ..... OFF
11. PROGRAM AE (Menu display) ..... OFF
12. PICTURE EFFECT (Menu display) ..... OFF
13. 16 : 9 WIDE (MENU display) ..... OFF

*1: Video light model (CCD-TRV107/TRV308/TRV408/TRV608)
*2: Steady shot model (CCD-TRV308/TRV408/TRV608)

#### 2. Order of Adjustments

Basically carry out adjustments in the order given.

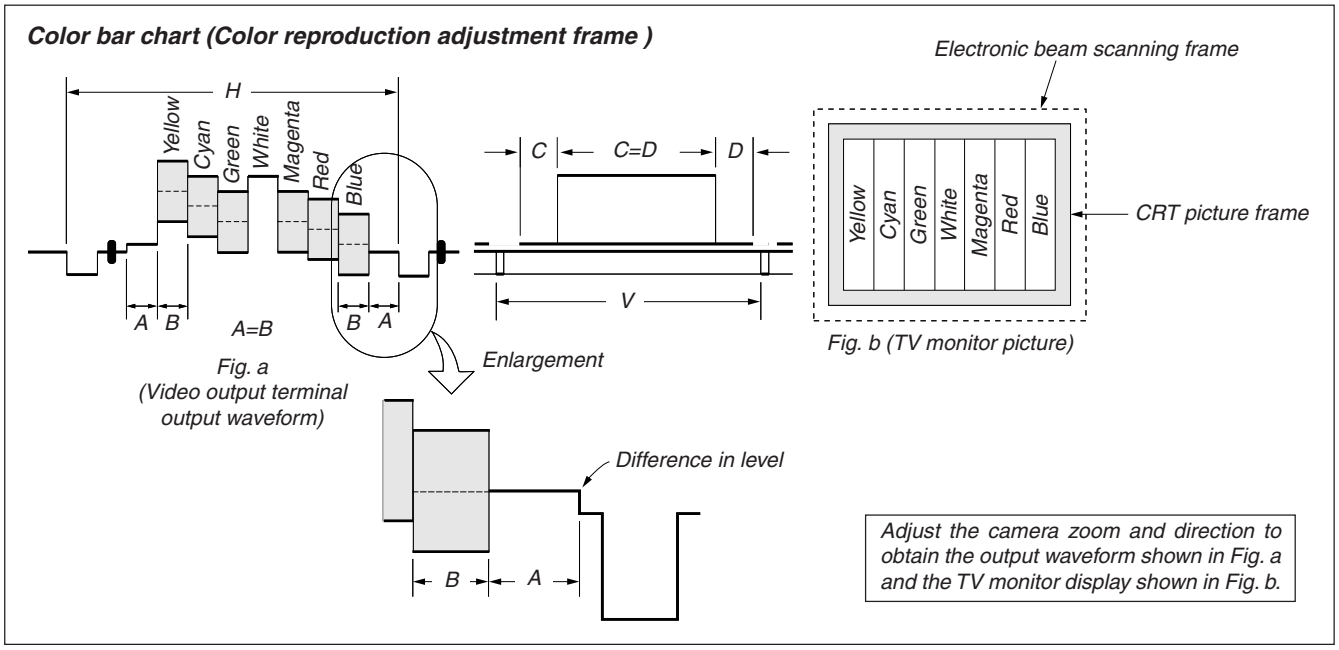


*Fig. 5-1-5.*

#### 3. Subjects

1) Color bar chart (Color reproduction adjustment frame)
   When performing adjustments using the color bar chart, adjust the picture frame as shown in Fig. 5-1-5. (Color reproduction adjustment frame)
2) Clear chart (Color reproduction adjustment frame)
   Remove the color bar chart from the pattern box and insert a clear chart in its place. (Do not perform zoom operations during this time.)
3) Flange back adjustment chart
   Make the chart shown in Fig. 5-1-6. using A0 size (1189mm × 841mm) black and white vellum paper.

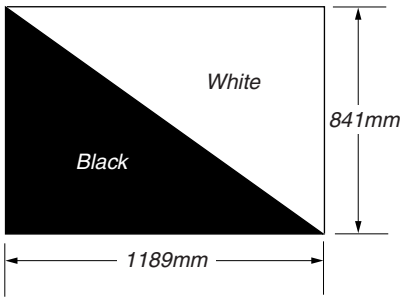


*Fig. 5-1-6.*

**Note:** Use matte vellum paper bigger than A0, and make sure the edges of the black and white paper joined together are not rough.

## 1-2. INITIALIZATION OF D, E, F, 7 PAGE DATA

### 1. Initializing the D, E, F, 7 Page Data

**Note1: If "Initializing the D, E, F, 7 Page Data" is performed, all data of the D page, E page, F page and 7 page will be initialized. (It is impossible to initialize a single page.)**

**Note2:** If the D, E, F, 7 page data has been initialized, "Modification of D, E, F, 7 Page Data" and all adjustments need to be performed again.

| | |
|---|---|
| Adjusting page | D |
| Adjusting Address | 10 to 7F |
| Adjusting page | F |
| Adjusting Address | 10 to FF |
| Adjusting page | E |
| Adjusting Address | 00 to FF |
| Adjusting page | 7 |
| Adjusting Address | 00 to 6B |

**Initializing Method:**

| Order | Page | Address | Data | Procedure |
|---|---|---|---|---|
| 1 | 0 | 01 | 01 | Set the data. |
| 2 | 6 | 00 | 55 | Set the data. |
| 3 | 6 | 01 | 55 | Set the data, and press PAUSE button. |
| 4 | 6 | 02 | | Check that the data changes to "01". |
| 5 | 2 | 00 | 29 | Set the data |
| 6 | 2 | 01 | 29 | Set the data, and press the PAUSE button. |
| 7 | | | | Perform "Modification of D, E, F, 7 Page Data". |

### 2. Modification of D, E, F, 7 Page Data

If the D, E, F, 7 page data has been initialized, change the data of the "Fixed data-2" address shown in the following tables by manual input.

**Modifying Method:**

1) Before changing the data, select page: 0, address: 01, and set data: 01.
2) New data for changing are not shown in the tables because they are different in destination. When changing the data, copy the data built in the same model.
   **Note:** If copy the data built in the different model, the camcorder may not operate.
3) When changing the data, press the PAUSE button of the adjustment remote commander each time when setting new data to write the data in the non-volatile memory.
4) Check that the data of adjustment addresses is the initial value. If not, change the data to the initial value.

**Processing after Completing Modification of D, E, F, 7 Page data**

| Order | Page | Address | Data | Procedure |
|---|---|---|---|---|
| 1 | 2 | 00 | 29 | Set the data |
| 2 | 2 | 01 | 29 | Set the data, and press the PAUSE button. |

**Note:** If the following symptoms occur after completing of the "Modification of D, E, F, 7 page data", check that the data of the "Fixed data-2" addresses of D page are same as those of the same model of the same destination.
1) The self-diagnosis code "E:20:00" on the LCD or viewfinder screen is flashing.
2) The power is shut off so that unit cannot operate.

### 3. D Page Table

**Note1:** Fixed data-1: Initialized data. (Refer to "1. Initializing the D, E, F, 7 Page Data".)
Fixed data-2: Modified data. (Refer to "2. Modification of D, E, F, 7 Page Data".)

| Address | Initial data | Remark |
|---|---|---|
| 00 to 0F | | |
| 10 | 00 | Test mode |
| 11 to 12 | | Fixed data-1 |
| 13 | | Fixed data-2 |
| 14 to 19 | | Fixed data-1 |
| 1A | | Fixed data-2 |
| 1B to 1E | | Fixed data-1 |
| 1F | | Fixed data-2 |
| 20 to 21 | | Fixed data-1 |
| 22 | | Fixed data-2 |
| 23 | | Fixed data-1 |
| 24 | | Fixed data-2 |
| 25 to 26 | | Fixed data-1 |
| 27 | | Fixed data-2 |
| 28 to 31 | | Fixed data-1 |
| 32 | | Fixed data-2 |
| 33 | | Fixed data-1 |
| 34 | | Fixed data-2 |
| 35 | | |
| 36 | | Fixed data-1 |
| 37 | | Fixed data-2 |
| 38 | | (Modified data. Copy the data built in |
| 39 | | the same model.) |
| 3A to 3B | | Fixed data-1 |
| 3C | | Fixed data-2 |
| 3D | | |
| 3E to 40 | | Fixed data-1 |
| 41 | | Fixed data-2 |
| 42 | | (Modified data. Copy the data built in |
| 43 | | the same model.) |
| 44 | | |
| 45 | | |
| 46 | | |
| 47 | | |
| 48 | | |
| 49 | | |
| 4A | | |
| 4B | | |

D page

| Address | Initial data | Remark |
|---|---|---|
| 4C | | Fixed data-2 (Modified data. Copy the data built in the same model.) |
| 4D | | |
| 4E | | |
| 4F | | |
| 50 | | |
| 51 to 54 | | Fixed data-1 |
| 55 | | Fixed data-2 |
| 56 to 57 | | Fixed data-1 |
| 58 | | Fixed data-2 (Modified data. Copy the data built in the same model.) |
| 59 | | |
| 5A | | |
| 5B | | |
| 5C | | |
| 5D to 5E | | Fixed data-1 |
| 5F | | Fixed data-2 |
| 60 to 72 | | Fixed data-1 |
| 73 | | Fixed data-2 |
| 74 to 7B | | Fixed data-1 |
| 7C | | Fixed data-2 |
| 7D to 7F | | Fixed data-1 |

*Table. 5-1-2.*

## 4. F Page table

**Note1:** Fixed data-1: Initialized data. (Refer to "1. Initializing the D, E, F, 7 Page Data".)
Fixed data-2: Modified data. (Refer to "2. Modification of D, E, F, 7 Page Data".)

| Address | Initial data | Remark |
|---|---|---|
| 00 to 0F | | |
| 10 | 00 | Emergency memory address |
| 11 | 00 | |
| 12 | 00 | |
| 13 | 00 | |
| 14 | 00 | |
| 15 | 00 | |
| 16 | 00 | |
| 17 | 00 | |
| 18 | 00 | |
| 19 | 00 | |
| 1A | 00 | |
| 1B | 00 | |
| 1C | | Fixed data-2 |
| 1D | | |
| 1E to 21 | | Fixed data-1 |
| 22 | | Fixed data-2 |
| 23 | | Fixed data-1 |
| 24 | | Fixed data-2 |
| 25 to 2E | | Fixed data-1 |
| 2F | | Fixed data-2 |
| 30 | 52 | HALL adj. |
| 31 | 89 | |
| 32 | 88 | |
| 33 | | Fixed data-2 |
| 34 | 80 | AWB & LV standard data input |
| 35 | 7A | |
| 36 | 2B | |
| 37 | 80 | |
| 38 | 65 | |
| 39 | 80 | |
| 3A | 8D | Auto white balance adj. |
| 3B | 87 | |
| 3C to 3E | | Fixed data-1 |
| 3F | 33 | Color reproduction adj. |
| 40 | | Fixed data-1 |
| 41 | 34 | Color reproduction adj. |
| 42 to 44 | | Fixed data-1 |
| 45 | 8C | 28MHz origin osc. Adj. |
| 46 | 28 | Flange back adj. |
| 47 | 07 | |
| 48 | 3A | |
| 49 | 4A | |
| 4A | 12 | |
| 4B | 0B | |
| 4C | 54 | |
| 4D | 00 | |
| 4E | 19 | |
| 4F | 00 | |
| 50 | 37 | |
| 51 | 00 | |
| 52 | 00 | |

F page

| Address | Initial data | Remark |
|---|---|---|
| 53 | 04 | Flange back adj. |
| 54 | 00 | |
| 55 | 00 | |
| 56 | | Fixed data-2 |
| 57 | | |
| 58 | 00 | Flange back adj. |
| 59 | 83 | CAP FG offset adj. |
| 5A | 0B | Switching position adj. |
| 5B | 00 | |
| 5C | | Fixed data-1 |
| 5D | 50 | AFC fo adj. |
| 5E | 68 | Y OUT level adj. |
| 5F | 62 | C OUT level adj. |
| 60 to 61 | | Fixed data-1 |
| 62 | B4 | REC Y current adj. |
| 63 | B4 | |
| 64 to 68 | | Fixed data-1 |
| 69 | A0 | REC C/AFM current adj. |
| 6A to 72 | | Fixed data-1 |
| 73 | A6 | 1.5MHz deviation adj. |
| 74 | 80 | BPF fo adj. |
| 75 | | Fixed data-1 |
| 76 | | Fixed data-2 |
| 77 to 85 | | Fixed data-1 |
| 86 | | Fixed data-2 |
| 87 to 93 | | Fixed data-1 |
| 94 | | Fixed data-2 |
| 95 | | |
| 96 to AB | | Fixed data-1 |
| AC | | Fixed data-2 |
| AD to AE | | Fixed data-1 |
| AF | FD | Color reproduction adj. |
| B0 | F4 | |
| B1 | 0F | |
| B2 | 31 | |
| B3 to B5 | | Fixed data-1 |
| B6 | | Fixed data-2 |
| B7 | | (Modified data. Copy the data built in |
| B8 | | the same model.) |
| B9 to C9 | | Fixed data-1 |
| CA | | Fixed data-2 |
| CB | | |
| CC | | Fixed data-1 |
| CD | | Fixed data-2 |
| CE to DD | | Fixed data-1 |
| DE | | Fixed data-2 |
| DF | | Fixed data-1 |
| E0 | | Fixed data-2 |
| E1 | | Fixed data-1 |
| E2 | | Fixed data-2 |
| E3 | | |
| E4 to E8 | | Fixed data-1 |
| E9 | | Fixed data-2 |
| EA | | (Modified data. Copy the data built in |
| EB | | the same model.) |

| Address | Initial data | Remark |
|---|---|---|
| EC | | Fixed data-2 |
| ED | | (Modified data. Copy the data built in |
| EE | | the same model.) |
| EF to F1 | | Fixed data-1 |
| F2 | | Fixed data-2 |
| F3 | | |
| F4 to FF | | Fixed data-1 |

*Table. 5-1-3.*

### 5. E Page Table

**Note:** Fixed data-1: Initialized data. (Refer to "1. Initializing the D, E, F, 7 Page Data".)
Fixed data-2: Modified data. (Refer to "2. Modification of D, E, F, 7 Page Data".)

| Address | Remark |
|---|---|
| 00 to 01 | Fixed data-1 |
| 02 | Fixed data-2 |
| 03 to 06 | Fixed data-1 |
| 07 | Fixed data-2 |
| 08 to 09 | Fixed data-1 |
| 0A | Fixed data-2 |
| 0B | Fixed data-1 |
| 0C | Fixed data-2 |
| 0D | |
| 0E to 0F | Fixed data-1 |
| 10 | Fixed data-2 |
| 11 to 15 | Fixed data-1 |
| 16 | Fixed data-2 |
| 17 to 1E | Fixed data-1 |
| 1F | Fixed data-2 |
| 20 to 25 | Fixed data-1 |
| 26 | Fixed data-2 |
| 27 to 39 | Fixed data-1 |
| 3A | Fixed data-2 |
| 3B to 40 | Fixed data-1 |
| 41 | Fixed data-2 |
| 42 | (Modified data. Copy the data built in the same |
| 43 | model.) |
| 44 | Fixed data-1 |
| 45 | Fixed data-2 |
| 46 to 50 | Fixed data-1 |
| 51 | Fixed data-2 |
| 52 | |
| 53 | Fixed data-1 |
| 54 | Fixed data-2 |
| 55 to FF | Fixed data-1 |

*Table. 5-1-4*

### 6. 7 Page Table

**Note:** Fixed data-1: Initialized data. (Refer to "1. Initializing the D, E, F, 7 Page Data".)
Fixed data-2: Modified data. (Refer to "2. Modification of D, E, F, 7 Page Data".)

| Address | Initial data | Remark |
|---|---|---|
| 00 to 22 | | Fixed data-1 |
| 23 | | Fixed data-2 |
| 24 | | (Modified data. Copy the data built in |
| 25 | | the same model.) |
| 26 | | |
| 27 | | |
| 28 | | |
| 29 | | |
| 2A | | |
| 2B | | |
| 2C | | |
| 2D | | |
| 2E to 30 | | Fixed data-1 |
| 31 | | Fixed data-2 |
| 32 | | (Modified data. Copy the data built in |
| 33 | | the same model.) |
| 34 | | Fixed data-1 |
| 35 | | Fixed data-2 |
| 36 | A0 | RGB AMP adj. (EVF) *1 |
| 37 to 39 | | Fixed data-1 |
| 3A | 2F | Contrast adj. (EVF) *1 |
| 3B to 40 | | Fixed data-1 |
| 41 | | Fixed data-2 |
| 42 | | |
| 43 | 71 | VCO adj. (LCD) |
| 44 | | Fixed data-1 |
| 45 | 8A | V COM adj. (LCD) |
| 46 | 2E | RGB AMP adj. (LCD) |
| 47 | | Fixed data-1 |
| 48 | AD | COM AMP adj.(LCD) |
| 49 | 60 | White balance adj.(LCD) |
| 4A | 65 | |
| 4B | 50 | Contrast adj.(LCD) |
| 4C | | Fixed data-1 |
| 4D | | Fixed data-2 |
| 4E to 53 | | Fixed data-1 |
| 54 | | Fixed data-2 |
| 55 | | |
| 56 to 6B | | Fixed data-1 |

*1: EVF TYPE S model (CCD-TRV107/TRV308/TRV408/TRV608)

*Table. 5-1-5.*

## 1-3. CAMERA SYSTEM ADJUSTMENTS

Before perform the camera system adjustments, check that the specified values of "VIDEO SYSTEM ADJUSTMENTS" are satisfied.

### 1. HALL Adjustment RadarW

For detecting the position of the lens iris, adjust AMP gain and offset.

| | |
|---|---|
| Subject | Not required |
| Measurement Point | Display data of page 1 (Note1) |
| Measuring Instrument | Adjustment remote commander |
| Adjustment Page | F |
| Adjustment Address | 30, 31, 32 |
| Specified Value 1 | 86 to 8A |
| Specified Value 2 | 15 to 19 |

**Note1:** Displayed data of page 1 of the adjustment remote commander.
1 : 00 : XX
└── IRIS display data

**Adjusting method:**

| Order | Page | Address | Data | Procedure |
|---|---|---|---|---|
| 1 | 0 | 01 | 01 | Set the data. |
| 2 | 6 | 94 | 88 | Set the data. |
| 3 | 6 | 95 | 17 | Set the data. |
| 4 | 6 | 01 | 6D | Set the data, and press PAUSE button. |
| 5 | 6 | 02 | | Check that the data changes to "01". (Note2) |
| 6 | 6 | 01 | 00 | Set the data, and press PAUSE button. |

**Note2:** The adjustment data will be automatically input to page: F, address: 30, 31, 32.

**Checking method:**

| Order | Page | Address | Data | Procedure |
|---|---|---|---|---|
| 1 | 0 | 03 | 03 | Set the data. |
| 2 | 6 | 01 | 01 | Set the data, and press PAUSE button. |
| 3 | 1 | | | Check that the IRIS display data (Note1) satisfies the specified value 1. |
| 4 | 6 | 01 | 03 | Set the data, and press PAUSE button. |
| 5 | 1 | | | Check that the IRIS display data (Note1) satisfies the specified value.2. |

**Processing after Completing Adjustments:**

| Order | Page | Address | Data | Procedure |
|---|---|---|---|---|
| 1 | 6 | 94 | 00 | Set the data. |
| 2 | 6 | 95 | 00 | Set the data. |
| 3 | 6 | 01 | 00 | Set the data, and press PAUSE button. |
| 4 | 0 | 03 | 00 | Set the data. |
| 5 | 0 | 01 | 00 | Set the data. |

## 2. Flange Back Adjustment (Using Minipattern Box) RadarW

The inner focus lens flange back adjustment is carried out automatically. In whichever case, the focus will be deviated during auto focusing/manual focusing.

| | |
|---|---|
| Subject | Siemens star chart with ND filter for the minipattern box (Note1) |
| Measuring Instrument | Adjustment remote commander |
| Adjustment Page | F |
| Adjustment Address | 46 to 55, 58 |

**Note1:** Dark Siemens star chart.
**Note2:** Check that the data of page: 6, address: 02 is "00". If not, to page: 6, address: 01, set data: 00, and press the PAUSE button.
**Note3:** Make the lens horizontal and perform this adjustment.
**Note4:** 1/4 CCD model: CCD-TRV308/TRV408/TRV608
1/6 CCD model: CCD-TRV107/TRV108

**Switch setting:**

NIGHT SHOT (Lens block) ..... OFF

**Preparations:**

1) The minipattern box is installed as shown in the following figure.
   **Note:** The attachment lenses are not used.
2) Install the minipattern box so that the distance between it and the front of the lens of the camcorder is less than 3cm.
3) Make the height of the minipattern box and the camcorder equal.
4) Check that the output voltage of the regulated power supply is the specified voltage.
5) Check that at both the zoom lens TELE end and WIDE end, the center of the Siemens star chart and center of the exposure screen coincide.

Specified voltage: The specified voltage varies according to the minipattern box, so adjust the power supply output voltage to the specified voltage written on the sheet which is supplied with the minipattern box.

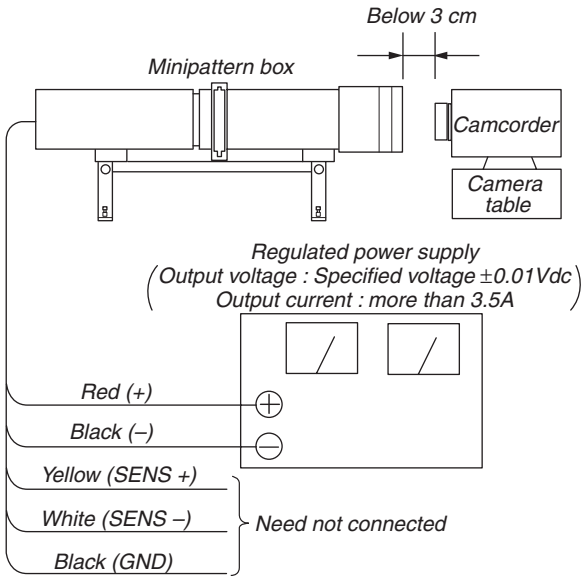


*Fig. 5-1-7.*

**Adjusting method for 1/4 CCD model:**

| Order | Page | Address | Data | Procedure |
|---|---|---|---|---|
| 1 | 0 | 01 | 01 | Set the data. |
| 2 | F | 86 | | Write down the data. |
| 3 | F | 86 | 00 | Set the data and press PAUSE button. |
| 4 | 6 | 01 | 13 | Set the data, and press PAUSE button. |
| 5 | 6 | 01 | 27 | Set the data, and press PAUSE button. |
| 6 | 6 | 02 | | Check that the data changes to "01". (Note5) |
| 7 | F | 86 | | Set the data that is written down at step 2 and press PAUSE button. |

**Note5:** The adjustment data will be automatically input to page: F, address: 46 to 55, 58.

**Adjusting method for 1/6 CCD model:**

| Order | Page | Address | Data | Procedure |
|---|---|---|---|---|
| 1 | 0 | 01 | 01 | Set the data. |
| 2 | 6 | 01 | 13 | Set the data, and press PAUSE button. |
| 3 | 6 | 01 | 27 | Set the data, and press PAUSE button. |
| 4 | 6 | 02 | | Check that the data changes to "01". (Note5) |

**Note5:** The adjustment data will be automatically input to page: F, address: 46 to 55, 58.

**Processing after Completing Adjustments:**

| Order | Page | Address | Data | Procedure |
|---|---|---|---|---|
| 1 | 6 | 01 | 00 | Set the data, and press PAUSE button. |
| 2 | 0 | 01 | 00 | Set the data. |
| 3 | | | | Turn off the power and turn on again. |
| 4 | | | | Perform "Flange Back Check". |

### 3. Flange Back Adjustment RadarW (Using Flange Back Adjustment Chart and Subject More Than 500m Away)

The inner focus lens flange back adjustment is carried out automatically. In whichever case, the focus will be deviated during auto focusing/manual focusing.

#### 3-1. Flange Back Adjustment (1)

| | |
|---|---|
| Subject | Flange back adjustment chart (2.0 m from the front of the protection glass) (Luminance: 200 ± 30 lux) |
| Measuring Instrument | Adjustment remote commander |
| Adjustment Page | F |
| Adjustment Address | 46 to 55, 58 |

**Note1:** Check that the data of page: 6, address: 02 is "00". If not, to page: 6, address: 01, set data: 00, and press the PAUSE button.
**Note2:** Make the lens horizontal and perform this adjustment.
**Note3:** 1/4 CCD model: CCD-TRV308/TRV408/TRV608
1/6 CCD model: CCD-TRV107/TRV108

**Switch setting:**
NIGHT SHOT (Lens block) ..... OFF

**Adjusting method for 1/4 CCD model:**

| Order | Page | Address | Data | Procedure |
|---|---|---|---|---|
| 1 | 0 | 01 | 01 | Set the data. |
| 2 | F | 86 | | Write down the data. |
| 3 | F | 86 | 00 | Set the data and press PAUSE button. |
| 4 | 6 | 01 | 13 | Set the data, and press PAUSE button. |
| 5 | 6 | 01 | 15 | Set the data, and press PAUSE button. |
| 6 | 6 | 02 | | Check that the data changes to "01". (Note4) |
| 7 | F | 86 | | Set the data that is written down at step 2 and press PAUSE button. |

**Note4:** The adjustment data will be automatically input to page: F, address: 46 to 55, 58.

**Adjusting method for 1/6 CCD model:**

| Order | Page | Address | Data | Procedure |
|---|---|---|---|---|
| 1 | 0 | 01 | 01 | Set the data. |
| 2 | 6 | 01 | 13 | Set the data, and press PAUSE button. |
| 3 | 6 | 01 | 15 | Set the data, and press PAUSE button. |
| 4 | 6 | 02 | | Check that the data changes to "01". (Note4) |

**Note4:** The adjustment data will be automatically input to page: F, address: 46 to 55, 58.

**Processing after Completing Adjustments:**

| Order | Page | Address | Data | Procedure |
|---|---|---|---|---|
| 1 | 6 | 01 | 00 | Set the data, and press PAUSE button. |
| 2 | | | | Turn off the power and turn on again. |
| 3 | | | | Perform "Flange Back Adjustment (2)" |

#### 3-2. Flange Back Adjustment (2)

Perform this adjustment after performing "Flange Back Adjustment (1)".

| | |
|---|---|
| Subject | Subject more than 500m away (Subjects with clear contrast such as buildings, etc.) |
| Measurement Point | Check operation on TV monitor |
| Measuring Instrument | |
| Adjustment Page | F |
| Adjustment Address | 46 to 55, 58 |

**Note1:** Check that the data of page: 6, address: 02 is "00". If not, to page: 6, address: 01, set data: 00, and press the PAUSE button.
**Note2:** Make the lens horizontal and perform this adjustment.

**Switch setting:**
NIGHT SHOT (Lens block) ..... OFF

**Preparations:**
1) Set the zoom lens to the TELE end and expose a subject that is more than 500m away (subject with clear contrast such as building, etc.). (Nearby subjects less than 500m away should not be in the screen.)

**Adjusting method for 1/4 CCD model:**

| Order | Page | Address | Data | Procedure |
|---|---|---|---|---|
| 1 | 0 | 01 | 01 | Set the data. |
| 2 | F | 86 | | Write down the data. |
| 3 | F | 86 | 00 | Set the data and press PAUSE button. |
| 4 | 6 | 01 | 13 | Set the data, and press PAUSE button. |
| 5 | | | | Place a ND filter on the lens so that the optimum image is obtain. |
| 6 | 6 | 01 | 29 | Set the data, and press PAUSE button. |
| 7 | 6 | 02 | | Check that the data changes to "01". (Note3) |
| 8 | F | 86 | | Set the data that is written down at step 2 and press PAUSE button. |

**Note3:** The adjustment data will be automatically input to page: F, address: 46 to 55, 58.

**Adjusting method for 1/6 CCD model:**

| Order | Page | Address | Data | Procedure |
|---|---|---|---|---|
| 1 | 0 | 01 | 01 | Set the data. |
| 2 | 6 | 01 | 13 | Set the data, and press PAUSE button. |
| 3 | | | | Place a ND filter on the lens so that the optimum image is obtain. |
| 4 | 6 | 01 | 29 | Set the data, and press PAUSE button. |
| 5 | 6 | 02 | | Check that the data changes to "01". (Note3) |

**Note3:** The adjustment data will be automatically input to page: F, address: 46 to 55, 58.

**Processing after Completing Adjustments:**

| Order | Page | Address | Data | Procedure |
|---|---|---|---|---|
| 1 | 6 | 01 | 00 | Set the data, and press PAUSE button. |
| 2 | 0 | 01 | 00 | Set the data. |
| 3 | | | | Turn off the power and turn on again. |
| 4 | | | | Perform "Flange Back Check". |

### 4. Flange Back Check

| | |
|---|---|
| Subject | Siemens star<br>(2.0m from the front of the lens)<br>(Luminance : approx. 200 lux) |
| Measurement Point | Check operation on TV monitor |
| Measuring Instrument | |
| Specified Value | Focused at the TELE end and WIDE end. |

**Note:** When the auto focus is ON, the lens can be checked if it is focused or not by observing the data on the page 1 of the adjustment remote commander.
1) Select page: 0, address: 03, and set data: 0F.
2) Page 1 shows the state of the focus.

1 : 00 : XX
- Odd: Focused
- Even: Unfocused

**Switch setting:**
NIGHT SHOT (Lens block) ..... OFF

**Checking method:**
1) Select page: 6, address: 40, and set data: 02.
2) Select page: 6, address: 41, and set data: 01.
3) Place the Siemens star 2.0m from the front of the lens.
4) To open the IRIS, decrease the luminous intensity to the Siemens star up to a point before noise appear on the image.
5) Shoot the Siemens star with the zoom TELE end.
6) Turn on the auto focus.
7) Check that the lens is focused (Note).
8) Select page: 6, address: 21, and set data: 10.
9) Shoot the Siemens star with the zoom WIDE end.
10) Observe the TV monitor and check that the lens is focused.

**Processing after Completing Adjustments:**
1) Select page: 6, address: 21, and set data: 00.
2) Select page: 6, address: 40, and set data: 00.
3) Select page: 6, address: 41, and set data: 00.
4) Select page: 0, address: 03, and set data: 00.

### 5. Picture Frame Setting

| | |
|---|---|
| Subject | Color bar chart<br>(Color reproduction adjustment frame)<br>(1.5m from the front of the lens) |
| Measurement Point | Video output terminal |
| Measuring Instrument | Oscilloscope and TV monitor |
| Specified Value | A=B, C=D, E=F |

**Note:** The following adjustments should be carried out upon completion of “Flange back adjustment”.

**Switch setting:**
1) NIGHT SHOT (Lens block) ..... OFF
2) DIGITAL ZOOM (Menu display) ..... OFF
3) STEADY SHOT (Menu display) ..... OFF
4) LIGHT (FK-2000 block) ..... OFF

**Setting method:**
1) Adjust the zoom and the camera direction, and set to the specified position.
2) Mark the position of the picture frame on the monitor display, and adjust the picture frame to this position in following adjustments using “Color reproduction adjustment frame”.

***Check on the oscilloscope***

***1. Horizontal period***

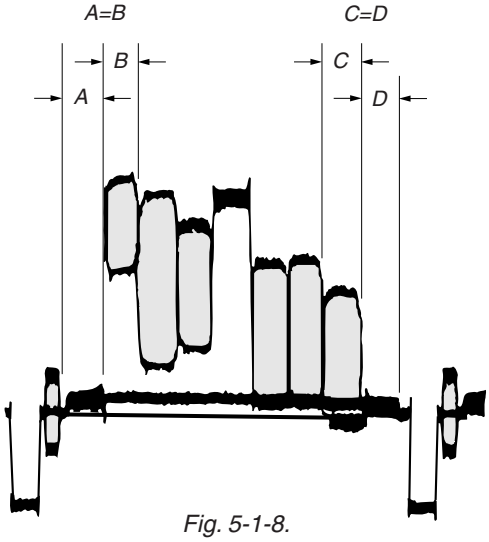


*Fig. 5-1-8.*

***2. Vertical period***

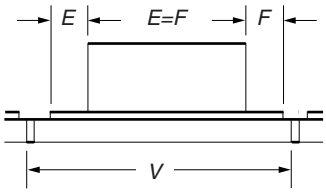


*Fig. 5-1-9.*

***Check on the monitor TV (Underscanned mode)***

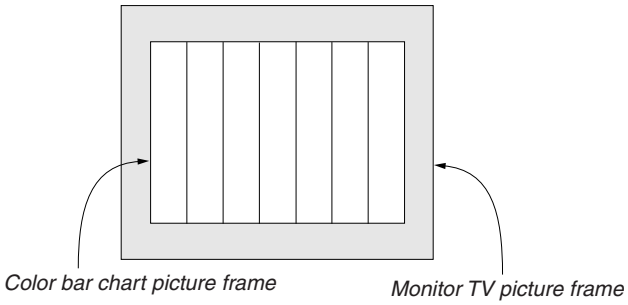


*Fig. 5-1-10.*

### 6. Color Reproduction Adjustment

Adjust the color Separation matrix coefficient so that proper color reproduction is produced.

| | |
|---|---|
| Subject | Color bar chart<br>(Color reproduction adjustment frame) |
| Measurement Point | Video output terminal |
| Measuring Instrument | Vectorscope |
| Adjustment Page | F |
| Adjustment Address | 3F, 41, AF, B0 |
| Specified Value | All color luminance points should settle within each color reproduction frame. |

**Note:** CCD TYPE S model: CCD-TRV107/TRV108/TRV608
CCD TYPE M model: CCD-TRV308/TRV408

**Switch setting:**

1) NIGHT SHOT (Lens block) ..... OFF
2) DIGITAL ZOOM (Menu display) ..... OFF
3) STEADY SHOT (Menu display) ..... OFF
4) LIGHT (FK-2000 block) ..... OFF

**Adjusting method:**

1) Select page: 0, address: 01, and set data: 01.
2) Select page: F, address: 77, and write down the data.
3) Select page: F, address: 77, set data: 29 and press the PAUSE button.
4) Select page: F, address: 2B, set data: 17 and press the PAUSE button.
5) Select page: 6, address: 01, set data: 3D, and press the PAUSE button.
6) Adjust the GAIN and PHASE of the vectorscope, and adjust the burst luminance point to the burst position of the color reproduction frame.
7) Change the data of page: F, address: 3F, 41, AF and B0, settle each color luminance point in each color reproduction frame.
   **Note:** Be sure to press the PAUSE button of the adjustment remote commander before changing the addresses. If not, the new data will not be written to the memory.

**Processing after Completing Adjustments:**

1) Select page: F, address: 77, set the data written down at step 2), and press the PAUSE button.
2) Select page: 6, address: 01, set data: 00, and press the PAUSE button.
3) Select page: 0, address: 01, and set data: 00.

*For CCD TYPE S*

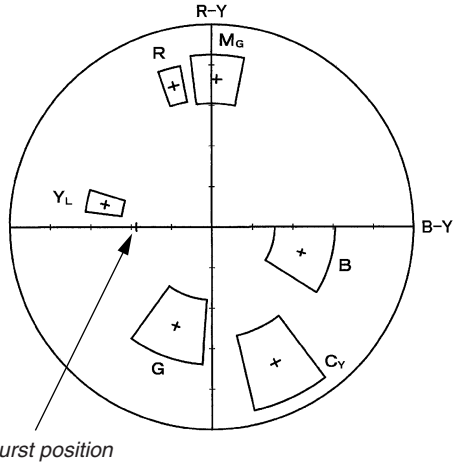


*For CCD TYPE M*

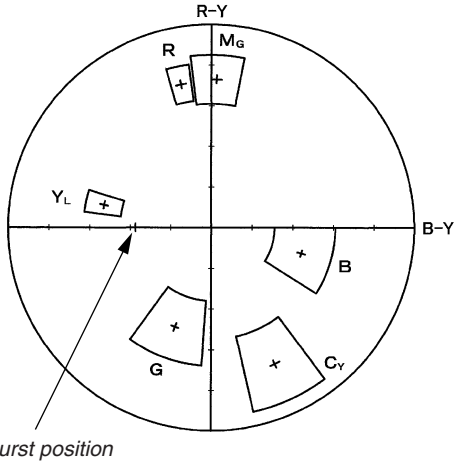


*Fig. 5-1-11.*

### 7. Auto White Balance & LV Standard Data Input RadarW

Adjust the white balance reference at 3200K, and adjust the normal coefficient of the light value.

| | |
|---|---|
| Subject | Clear chart<br>(Color reproduction adjustment frame) |
| Adjustment Page | F |
| Adjustment Address | 34 to 39 |

**Note1:** This adjustment should be carried out upon completion of "Color reproduction adjustments".
**Note2:** After the power is turned on, this adjustment can be done only once.
**Note3:** Check that the data of page: 6, address: 02 is "00". If not, to page: 6, address: 01, set data: 00, and press the PAUSE button.

**Switch setting:**

1) NIGHT SHOT (Lens block) ..... OFF
2) DIGITAL ZOOM (Menu display) ..... OFF
3) STEADY SHOT (Menu display) ..... OFF
4) LIGHT (FK-2000 block) ..... OFF

**Adjusting method:**

| Order | Page | Address | Data | Procedure |
|---|---|---|---|---|
| 1 | 0 | 01 | 01 | Set the data. |
| 2 | | | | Wait for 2 sec. |
| 3 | 6 | 01 | 11 | Set the data, and press PAUSE button. |
| 4 | 6 | 01 | 0D | Set the data, and press PAUSE button |
| 5 | 6 | 02 | | Check that the data changes to "01". (Note4) |

**Note4:** The adjustment data will be automatically input to page: F, address: 34 to 39.

**Processing after Completing Adjustments**

| Order | Page | Address | Data | Procedure |
|---|---|---|---|---|
| 1 | 6 | 01 | 00 | Set the data, and press PAUSE button. |
| 2 | 0 | 01 | 00 | Set the data. |
| 3 | | | | Perform "Auto White Balance Adjustment". |

### 8. Auto White Balance Adjustment RadarW

Adjust to the proper auto white balance output data.
If it is not correct, auto white balance and color reproducibility will be poor.

| | |
|---|---|
| Subject | Clear chart<br>(Color reproduction adjustment frame) |
| Filter | Filter C14 for color temperature correction |
| Measurement Point | Display data of page 1 (Note4) |
| Measuring Instrument | Adjustment remote commander |
| Adjustment Page | F |
| Adjustment Address | 3A, 3B |
| Specified Value | 1/6 CCD TYPE S model:<br>R ratio: 2B80 to 2C80<br>B ratio: 5E00 to 5F00<br>1/4 CCD TYPE S model:<br>R ratio: 2A80 to 2B80<br>B ratio: 6100 to 6200<br>1/4 CCD TYPE M model:<br>R ratio: 2B00 to 2C00<br>B ratio: 6100 to 6200 |

**Note1:** 1/6 CCD TYPE S model: CCD-TRV107/TRV108
1/4 CCD TYPE S model: CCD-TRV608
1/4 CCD TYPE M model: CCD-TRV308/ TRV408

**Note2:** After the power is turned on, this adjustment can be done only once.

**Note3:** Perform "Auto White Balance & LV Standard Data Input" before this adjustment.

**Note4:** Displayed data of page 1 of the adjustment remote commander.
1 : XX : XX
Display data

**Switch setting:**

1) NIGHT SHOT (Lens block) ..... OFF
2) DIGITAL ZOOM (Menu display) ..... OFF
3) STEADY SHOT (Menu display) ..... OFF
4) LIGHT (FK-2000 block) ..... OFF

**Adjusting method:**

| Order | Page | Address | Data | Procedure |
|---|---|---|---|---|
| 1 | | | | Place the C14 filter for color temperature correction on the lens. |
| 2 | 0 | 01 | 01 | Set the data. |
| 3 | F | 90 | | Write down the data. |
| 4 | F | 90 | | Set the following data, and press PAUSE button.<br>2C: 1/6 CCD TYPE S model<br>2B: 1/4 CCD TYPE S model<br>2B: 1/4 CCD TYPE M model |
| 5 | F | 91 | | Write down the data. |
| 6 | F | 91 | | Set the following data, and press PAUSE button.<br>00: 1/6 CCD TYPE S model<br>00: 1/4 CCD TYPE S model<br>80: 1/4 CCD TYPE M model |
| 7 | F | 92 | | Write down the data. |
| 8 | F | 92 | | Set the following data, and press PAUSE button.<br>5E: 1/6 CCD TYPE S model<br>61: 1/4 CCD TYPE S model<br>61: 1/4 CCD TYPE M model |
| 9 | F | 93 | | Write down the data. |
| 10 | F | 93 | 80 | Set the data, and press PAUSE button. |
| 11 | 6 | 01 | A7 | Set the data, and press PAUSE button. |
| 12 | | | | Wait for 2 sec. |
| 13 | 6 | 01 | A5 | Set the data, and press PAUSE button. |
| 14 | 6 | 02 | | Check that the data changes to "01". (Note5) |
| 15 | 6 | 01 | 3F | Set the data, and press PAUSE button. |
| 16 | 0 | 03 | 04 | Set the data. |
| 17 | 1 | | | Check that the display data (Note4) satisfies the R ratio specified value. |
| 18 | 0 | 03 | 05 | Set the data. |
| 19 | 1 | | | Check that the display data (Note4) satisfies the B ratio specified value. |

**Note5:** The adjustment data will be automatically input to page: F, address: 3A, 3B.

**Processing after Completing Adjustments:**

| Order | Page | Address | Data | Procedure |
|---|---|---|---|---|
| 1 | 6 | 01 | 00 | Set the data, and press PAUSE button. |
| 2 | F | 90 | | Set the data that is written down at step 3, and press PAUSE button. |
| 3 | F | 91 | | Set the data that is written down at step 5, and press PAUSE button. |
| 4 | F | 92 | | Set the data that is written down at step 7, and press PAUSE button. |
| 5 | F | 93 | | Set the data that is written down at step 9, and press PAUSE button. |
| 6 | 0 | 03 | 00 | Set the data. |
| 7 | 0 | 01 | 00 | Set the data. |

### 9. White Balance Check RadarW

| | |
|---|---|
| Subject | Clear chart<br>(Color reproduction adjustment frame) |
| Filter | Filter C14 for color temperature correction<br>ND filter 1.0 and 0.4 and 0.1 |
| Measurement Point | Video output terminal |
| Measuring Instrument | Vectorscope |
| Specified Value | Fig. 5-1-12. A to B |

**Switch setting:**

1) NIGHT SHOT (Lens block) ..... OFF
2) DIGITAL ZOOM (Menu display) ..... OFF
3) STEADY SHOT (Menu display) ..... OFF
4) LIGHT (FK-2000 block) ..... OFF

**Checking method:**

| Order | Page | Address | Data | Procedure |
|---|---|---|---|---|
| | | | | **Indoor white balance check** |
| 1 | | | | Check that the lens is not covered with either filter. |
| 2 | 6 | 01 | 0F | Set the data, and press PAUSE button. |
| 3 | | | | Check that the center of the white luminance point is within the circle shown Fig. 5-1-12. A. |
| 4 | 6 | 01 | 00 | Set the data, and press PAUSE button. |
| | | | | **Outdoor white balance check** |
| 5 | 6 | 01 | 3F | Set the data, and press PAUSE button. |
| 6 | | | | Place the C14 filter on the lens. |
| 7 | | | | Check that the center of the white luminance point is within the circle shown Fig. 5-1-12. B. |
| 8 | | | | Remove the C14 filter. |
| | | | | **LV data check** |
| 9 | | | | Place the ND filter 1.5 (1.0 + 0.1 + 0.4) on the lens. |
| 10 | 6 | 01 | 0F | Set the data, and press PAUSE button. |
| 11 | | | | Wait for 2 sec. |
| 12 | 0 | 03 | 06 | Set the data. |
| 13 | 1 | | | Check that the display data (Note) satisfies the specified value.<br>Specified value: 0000 to 0BC0 |

**Note:** Displayed data of the adjustment remote commander.
1 : XX : XX
└── Display data

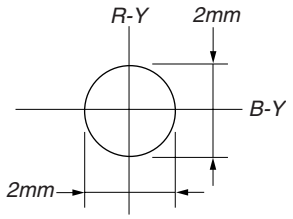


*Fig. 5-1-12. (A)*

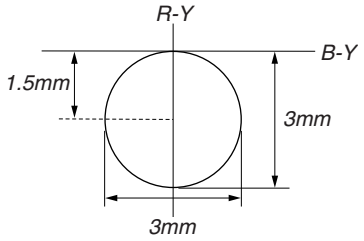


*Fig. 5-1-12. (B)*

**Processing after Completing Adjustments**

| Order | Page | Address | Data | Procedure |
|---|---|---|---|---|
| 1 | 6 | 01 | 00 | Set the data, and press PAUSE button. |
| 2 | 0 | 03 | 00 | Set the data. |

## 10. Steady Shot Check RadarW (CCD-TRV308/TRV408/TRV608)

**Precautions on the Parts Replacement**

There are two types of repair parts.

Type A: ENC03JA
Type B: ENC03JB

Replace the broken sensor with a same type sensor. If replace with other type parts, the image will vibrate up and down or left and right during hand-shake correction operations. After replacing, check the steady shot operation according to the following method.

**Precautions on Angular Velocity Sensor**

The sensor incorporates a precision oscillator. Handle it with care as if it dropped, the balance of the oscillator will be disrupted and operations will not be performed properly.

| | |
|---|---|
| Subject | Arbitrary |
| Measurement Point | Display data of page 1 (Note) |
| Measuring Instrument | Adjustment remote commander |
| Specified Value | 2700 to 5100 |

**Note:** Displayed data of the adjustment remote commander.

1 : XX : XX
└──── Display data

**Switch setting:**

1) STEADY SHOT (Menu display) ..... ON
2) ZOOM ..... TELE end

**Checking method:**

| Order | Page | Address | Data | Procedure |
|---|---|---|---|---|
| | | | | **Pitch sensor check** (SI-033 board SE750) |
| 1 | 0 | 03 | 11 | Set the data. |
| 2 | 1 | | | Check that the display data (Note1) satisfies the specified value. |
| | | | | **Yaw sensor check** (SI-033 board SE751) |
| 3 | 0 | 03 | 12 | Set the data. |
| 4 | 1 | | | Check that the display data (Note1) satisfies the specified value. |
| | | | | **Steady shot check** |
| 5 | | | | Move the camcorder, and check that the steady shot operations have been performed normally |

**Processing after Completing Adjustments**

| Order | Page | Address | Data | Procedure |
|---|---|---|---|---|
| 1 | 0 | 03 | 00 | Set the data. |

## 1-4. ELECTRONIC VIEWFINDER SYSTEM ADJUSTMENT (CCD-TRV107/TRV308/TRV408/TRV608)

**Note1:** Electronic viewfinder system adjustment is unnecessary with the EVF TYPE M model.
EVF TYPE S model: CCD-TRV107/TRV308/ TRV408/TRV608
EVF TYPE M model: CCD-TRV108

**Note2:** When replacing the LCD unit, be careful to prevent damages caused by static electricity.

### [Adjusting connector]

Most of the measuring points for adjusting the viewfinder system are concentrated in CN713 of VC-272 board.
Connect the Measuring instruments and the adjustment remote commander via the I/F unit for LANC control (J-6082-521-A) and CPC jig connector (J-6082-539-A) to CN713. To operate the adjustment remote commander, connect the AC power adapter to the DC IN jack of I/F unit for LANC control, or connect the L series Info-LITHIUM battery to the battery terminal of I/F unit for LANC control.
The following table shows the Pin No. and signal name of CN713.

| Pin No. | Signal Name | Pin No. | Signal Name |
|---|---|---|---|
| 1 | N.C. | 9 | PB RF |
| 2 | IR VIDEO | 10 | REG GND |
| 3 | BPF MONI | 11 | LANC OUT |
| 4 | CAP FG | 12 | LANC IN |
| 5 | RF SWP | 13 | XLANC POWER ON |
| 6 | REG GND | 14 | EVF VG |
| 7 | REC RF | 15 | VCO |
| 8 | REG GND | 16 | N.C. |

*Table 5-1-6.*

The following table shows the arrangement of the test points of I/F unit for LANC control. (Pin No. are those of CN713.)

| Pin No. | Signal Name | Pin No. | Signal Name |
|---|---|---|---|
| | BL | 15 | EVF VCO |
| 14 | EVF VG | | BL 4.75 |
| 9 | PB RF (MON) | | |
| 3 | BPF MONI | 6,8,10 | GND |
| | TMS | 7 | REC RF (RF IN) |
| | TDI | | TDO |
| 5 | SWP | | TCK |
| 4 | CAP FG | 2 | IR VIDEO |

*Table 5-1-7.*

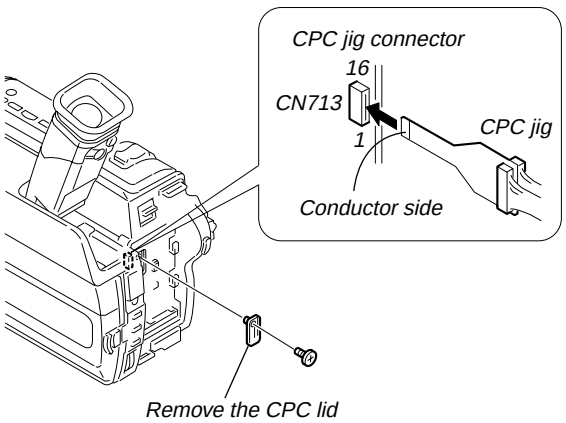


*Fig. 5-1-13.*

### 1. RGB AMP Adjustment (VF-150 board)

Set the D range of the RGB driver used to drive the LCD to the specified value. If deviated, the LCD screen will become blackish or saturated (whitish).

**Note:** Do either of the automatic adjustment or the manual adjustment.

### 1-1. Automatic Adjustment RadarW

| | |
|---|---|
| Mode | Camera |
| Subject | Arbitrary |
| Adjustment Page | 7 |
| Adjustment Address | 36 |

**Adjusting method:**

| Order | Page | Address | Data | Procedure |
|---|---|---|---|---|
| 1 | 0 | 01 | 01 | Set the data. |
| 2 | 6 | 01 | E3 | Set the data, and press PAUSE button. |
| 3 | 6 | 02 | | Check that the data changes from “00” to “01”. |
| 4 | 6 | 01 | 00 | Set the data, and press PAUSE button. |
| 5 | 0 | 01 | 00 | Set the data. |

### 1-2. Manual Adjustment

| | |
|---|---|
| Mode | Camera |
| Subject | Arbitrary |
| Measurement Point | EVF VG<br>(Pin ⑭ of CN713 of VC-272 board) |
| Measuring Instrument | Oscilloscope |
| Adjustment Page | 7 |
| Adjustment Address | 36 |
| Specified Value | A = 7.35 ± 0.27V |

**Adjusting method:**

| Order | Page | Address | Data | Procedure |
|---|---|---|---|---|
| 1 | 0 | 01 | 01 | Set the data. |
| 2 | 7 | 36 | | Change the data and set the voltage (A) between the reversed waveform pedestal and non-reversed waveform pedestal to the specified value. |
| 3 | 7 | 36 | | Press PAUSE button. |
| 4 | 0 | 01 | 00 | Set the data. |

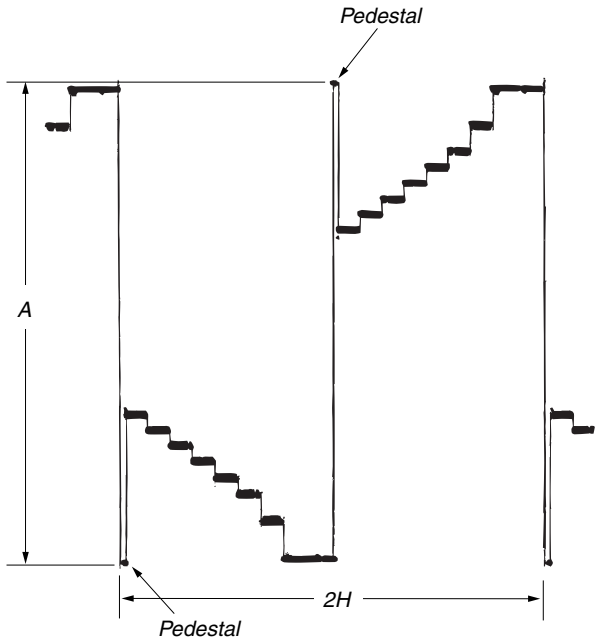


*Fig. 5-1-14.*

## 2. Contrast Adjustment (VF-150 board)

Set the level of the VIDEO signal for driving the LCD to the specified value. If deviated, the screen image will be blackish or saturated (whitish).

**Note:** Do either of the automatic adjustment or the manual adjustment.

### 2-1. Automatic Adjustment RadarW

| | |
|---|---|
| Mode | Camera |
| Subject | Arbitrary |
| Adjustment Page | 7 |
| Adjustment Address | 3A |

**Adjusting method:**

| Order | Page | Address | Data | Procedure |
|---|---|---|---|---|
| 1 | 0 | 01 | 01 | Set the data. |
| 2 | 6 | 01 | E5 | Set the data, and press PAUSE button. |
| 3 | 6 | 02 | | Check that the data changes from “00” to “01”. |
| 4 | 6 | 01 | 00 | Set the data, and press PAUSE button. |
| 5 | 0 | 01 | 00 | Set the data. |

### 2-2. Manual Adjustment

| | |
|---|---|
| Mode | Camera |
| Subject | Arbitrary |
| Measurement Point | EVF VG<br>(Pin ⑭ of CN713 of VC-272 board) |
| Measuring Instrument | Oscilloscope |
| Adjustment Page | 7 |
| Adjustment Address | 3A |
| Specified Value | A = 2.32 ± 0.12V |

**Adjusting method:**

| Order | Page | Address | Data | Procedure |
|---|---|---|---|---|
| 1 | 0 | 01 | 01 | Set the data. |
| 2 | 7 | 3A | | Change the data and set the voltage (A) between the 100 IRE and 0 IRE (pedestal) to the specified value.<br>(The data should be “00” to “7F”.) |
| 3 | 7 | 3A | | Press PAUSE button. |
| 4 | 0 | 01 | 00 | Set the data. |

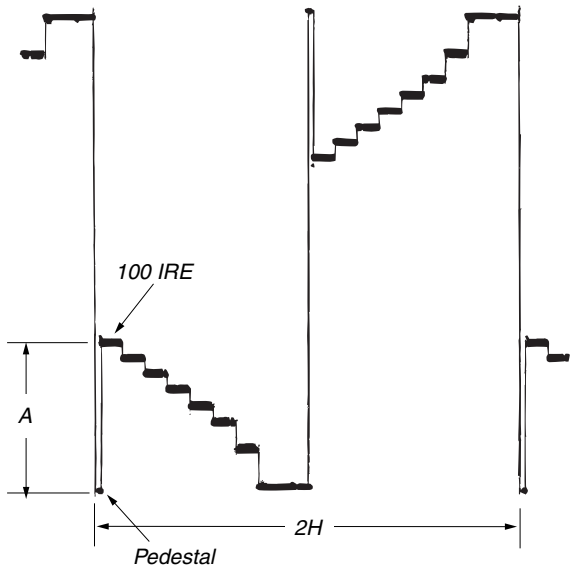


*Fig. 5-1-15.*

## 1-5. LCD SYSTEM ADJUSTMENT

**Note 1:** The back light (fluorescent tube) is driven by a high voltage AC power supply. Therefore, do not touch the back light holder to avoid electrical shock.

**Note 2:** When replacing the LCD unit, be careful to prevent damages caused by static electricity.

**Note 3:** Set the LCD BRIGHT (Menu display) to the center.
Set the LCD COLOR (Menu display) to the center.

**Note 4:** Connect the adjustment remote commander to CN713 of VC-272 board via I/F unit for LANC control (J-6082-521-A) and CPC jig connector (J-6082-539-A). To operate the adjustment remote commander, connect the AC power adapter (8.4Vdc) to the DC IN jack of I/F unit for LANC control, or connect the L series Info-LITHIUM battery to the battery terminal of I/F unit for LANC control.

### [Adjusting connector]

Most of the measuring points for adjusting the LCD system are concentrated in CN5502 of the PD-156 board. Connect the measuring instruments via the multi CPC jig (J-6082-311-A). The following table shows the Pin No. and signal name of CN5502.

| Pin No. | Signal Name | Pin No. | Signal Name |
|---|---|---|---|
| 1 | VB | 2 | XVD OUT |
| 3 | VG | 4 | PANEL COM |
| 5 | VR | 6 | PANEL ID |
| 7 | C-SYNC/XHD | 8 | XHD OUT |
| 9 | GND | 10 | GND |

*Table 5-1-8.*

### PD-156 board

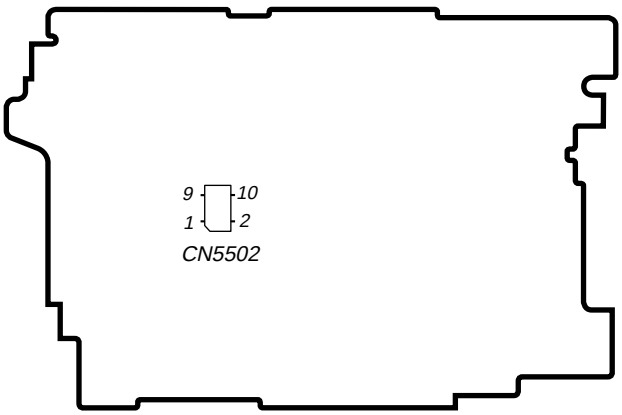


### 1. LCD Type Check

By measuring the resistor value between Pin ⑥ of CN5502 and GND, the type of LCD can be discriminated.

| Resistor value | LCD type | CCD- |
|---|---|---|
| 1.0 kΩ | 2.5 LCD TYPE S (61k) | TRV107/TRV108/ TRV308/TRV408 |
| 4.7 kΩ | 3.0 LCD TYPE S (123k) | TRV608 |

*Table 5-1-9.*

### 2. VCO Adjustment (PD-156 board)

Set the VCO free-run frequency. If deviated, the LCD screen will be blurred.

| | |
|---|---|
| Mode | VTR stop |
| Signal | No signal |
| Measurement Point | Pin ⑧ of CN5502 (XHD OUT) |
| Measuring Instrument | Frequency counter |
| Adjustment Page | 7 |
| Adjustment Address | 43 |
| Specified Value | f = 15734 ± 30Hz |

**Adjusting method:**

| Order | Page | Address | Data | Procedure |
|---|---|---|---|---|
| 1 | 0 | 01 | 01 | Set the data. |
| 2 | 7 | 43 | | Change the data and set the VCO frequency (f) to the specified value. |
| 3 | 7 | 43 | | Press PAUSE button. |
| 4 | 0 | 01 | 00 | Set the data. |

### 3. RGB AMP Adjustment (PD-156 board)

Set the D range of the RGB decoder used to drive the LCD to the specified value. If deviated, the LCD screen will become blackish or saturated (whitish).

| | |
|---|---|
| Mode | VTR stop |
| Signal | No signal |
| Measurement Point | Pin ③ of CN5502 (VG)<br>External trigger: Pin ④ of CN5502 (PANEL COM) |
| Measuring Instrument | Oscilloscope |
| Adjustment Page | 7 |
| Adjustment Address | 46 |
| Specified Value | A = 3.62 ± 0.05V |

**Adjusting method:**

| Order | Page | Address | Data | Procedure |
|---|---|---|---|---|
| 1 | 0 | 01 | 01 | Set the data. |
| 2 | 7 | 46 | | Change the data and set the voltage (A) between the reversed waveform pedestal and non-reversed waveform pedestal to the specified value.<br>(The data should be “00” to “3F”.) |
| 3 | 7 | 46 | | Press PAUSE button. |
| 4 | 0 | 01 | 00 | Set the data. |

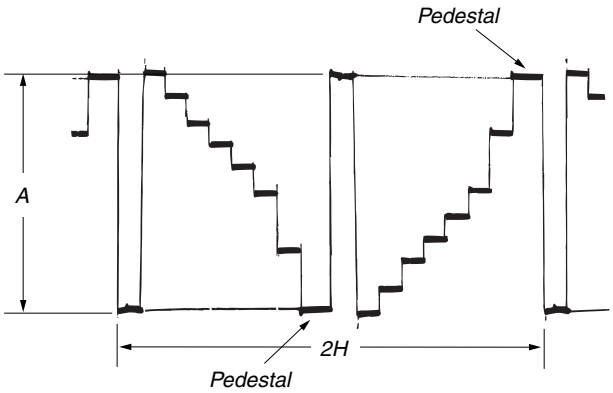


*Fig. 5-1-16.*

### 4. Contrast Adjustment (PD-156 board)

Set the level of the VIDEO signal for driving the LCD to the specified value. If deviated, the screen image will be blackish or saturated (whitish).

| | |
|---|---|
| Mode | VTR stop |
| Signal | No signal |
| Measurement Point | Pin ③ of CN5502 (VG)<br>External trigger: Pin ④ of CN5502 (PANEL COM) |
| Measuring Instrument | Oscilloscope |
| Adjustment Page | 7 |
| Adjustment Address | 4B |
| Specified Value | 2.5 LCD: A = 3.52 ± 0.07V<br>3.0 LCD: A = 3.32 ± 0.07V |

**Note:** 2.5 LCD model : CCD-TRV107/TRV108/TRV308/TRV408
3.0 LCD model : CCD-TRV608

**Adjusting method:**

| Order | Page | Address | Data | Procedure |
|---|---|---|---|---|
| 1 | 0 | 01 | 01 | Set the data. |
| 2 | 7 | 4B | | Change the data and set the voltage (A) between the 100 IRE and 0 IRE (pedestal) to the specified value.<br>(The data should be “00” to “7F”.) |
| 3 | 7 | 4B | | Press PAUSE button. |
| 4 | 0 | 01 | 00 | Set the data. |

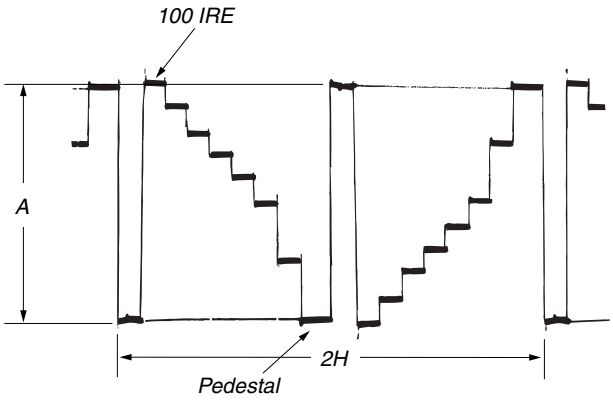


*Fig. 5-1-17.*

### 5. COM AMP Adjustment (PD-156 board)

Set the common electrode drive signal level of LCD to the specified value.

| | |
|---|---|
| Mode | VTR stop |
| Signal | No signal |
| Measurement Point | Pin ④ of CN5502 (PANEL COM) |
| Measuring Instrument | Oscilloscope |
| Adjustment Page | 7 |
| Adjustment Address | 48 |
| Specified Value | 2.5 LCD: A = 6.30 ± 0.05V<br>3.0 LCD: A = 6.05 ± 0.05V |

**Note:** 2.5 LCD model : CCD-TRV107/TRV108/TRV308/TRV408
3.0 LCD model : CCD-TRV608

**Adjusting method:**

| Order | Page | Address | Data | Procedure |
|---|---|---|---|---|
| 1 | 0 | 01 | 01 | Set the data. |
| 2 | 7 | 48 | | Change the data and set the PANEL COM signal level (A) to the specified value. |
| 3 | 7 | 48 | | Press PAUSE button. |
| 4 | 0 | 01 | 00 | Set the data. |

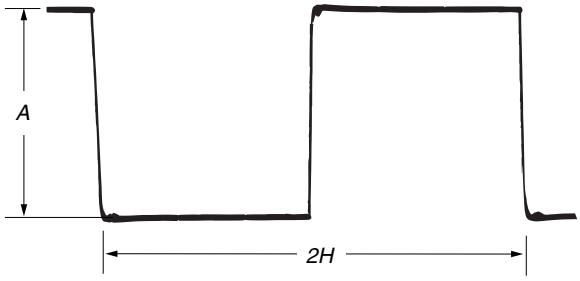


*Fig. 5-1-18.*

### 6. V-COM Adjustment (PD-156 board)

Set the DC bias of the common electrode drive signal of LCD to the specified value.
If deviated, the LCD display will move, producing flicker and conspicuous vertical lines.

| | |
|---|---|
| Mode | VTR stop |
| Signal | No signal |
| Measurement Point | Check on LCD display |
| Measuring Instrument | |
| Adjustment Page | 7 |
| Adjustment Address | 45 |
| Specified Value | The brightness difference between the section A and section B is minimum. |

**Note:** This adjustment should be carried out upon completion of the following adjustments.
RGB AMP Adjustment
Contrast Adjustment
COM AMP Adjustment

**Adjusting method:**

| Order | Page | Address | Data | Procedure |
|---|---|---|---|---|
| 1 | 0 | 01 | 01 | Set the data. |
| 2 | 7 | 45 | | Change the data so that the brightness of the section A and that of the section B is equal. |
| 3 | 7 | 45 | | Subtract 8 from the data. |
| 4 | 7 | 45 | | Press PAUSE button. |
| 5 | 0 | 01 | 00 | Set the data. |

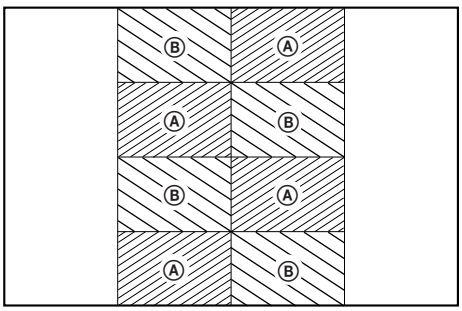


*Fig. 5-1-19.*

### 7. White Balance Adjustment (PD-156 board)

Correct the white balance.
If deviated, the reproduction of the LCD screen may degenerate.

| | |
|---|---|
| Mode | VTR stop |
| Signal | No signal |
| Measurement Point | Check on LCD screen |
| Measuring Instrument | |
| Adjustment Page | 7 |
| Adjustment Address | 49, 4A |
| Specified Value | The LCD screen should not be colored. |

**Note:** Check the white balance only when replacing the following parts. If necessary, adjust them.
1. LCD panel
2. Light induction plate
3. IC5501

**Adjusting method:**

| Order | Page | Address | Data | Procedure |
|---|---|---|---|---|
| 1 | 0 | 01 | 01 | Set the data. |
| 2 | 7 | 49 | 60 | Set the data, and press PAUSE button. |
| 3 | 7 | 4A | 65 | Set the data, and press PAUSE button. |
| 4 | 7 | 49 | | Check that the LCD screen is not colored. If not colored, proceed to step 10. |
| 5 | 7 | 49 | | Change the data so that the LCD screen is not colored. |
| 6 | 7 | 49 | | Press PAUSE button. |
| 7 | 7 | 4A | | Change the data so that the LCD screen is not colored. |
| 8 | 7 | 4A | | Press PAUSE button. |
| 9 | 7 | 4A | | If the LCD screen is colored, repeat steps 5 to 9. |
| 10 | 0 | 01 | 00 | Set the data. |

## 5-2. MECHANISM SECTION ADJUSTMENT

Mechanism Section adjustments, checks, and replacement of mechanism parts, refer to the separate volume "8mm Video Mechanism Adjustment Manual IX M2000 Mechanism".

### 2-1. ADJUSTMENT REMOTE COMMANDER

Connect the adjustment remote commander to CN713 of VC-272 board via I/F unit for LANC control (J-6082-521-A) and CPC jig connector (J-6082-539-A). To operate the adjustment remote commander, connect the AC power adapter (8.4Vdc) to the DC IN jack of I/F unit for LANC control, or connect the L series Info-LITHIUM battery to the battery terminal of I/F unit for LANC control.

### 2-2. OPERATING WITHOUT CASSETTE

1) Refer to "Section 2. DISASSEMBLY" and supply the power with the cabinet assembly removed. (So that the mechanical deck can be operated.)
2) Connect the adjustment remote commander.
3) Turn on the HOLD switch of the adjustment remote commander.
4) Close the cassette compartment without loading a cassette and complete loading.
5) Select page: 0, address: 01, and set data: 01.
6) Select page: F, address: 20, set data: 01, and press the PAUSE button of the adjustment remote commander.
7) Select page: D, address: 10, set data: 10, and press the PAUSE button of the adjustment remote commander.
8) Disconnect the power supply of the unit.
   By carrying out the above procedure, the unit can be operated without loading a cassette.
   Be sure to carry out "Processing after Operations" after checking the operations.
   Set the data of page: D, address: 10 to the following if the sensor ineffective mode, forced VTR power supply On mode or forced camera power supply ON mode are to be used together.
   Forced VTR power ON mode ..... 12
   Forced camera power ON mode ..... 11

**[Procedure after checking operations]**

1) Select page: 0, address: 01, and set data: 01.
2) Select page: F, address: 20, set data: 00, and press the PAUSE button of the adjustment remote commander.
3) Select page: D, address: 10, set data: 00, and press the PAUSE button of the adjustment remote commander.
4) Select page: 0, address: 01, and set data: 00.
5) Disconnect the power supply of the unit.

### 2-3. TAPE PATH ADJUSTMENT

**1. Preparations for Adjustment**

1) Clean the tape path face (tape guide, capstan shaft, pinch roller).
2) Connect the adjustment remote commander.
3) Turn on the HOLD switch of the adjustment remote commander.
4) Select page: 0, address: 01, and set data: 01.
5) Select page: F, address: 20, set data: 08, and press the PAUSE button of the adjustment remote commander.
   (Be sure to perform "Processing after operation" after completing adjustments.)
6) Connect the oscilloscope to I/F unit for LANC control.
   Channel 1: PB RF (Pin ⑨ of CN713)
   External trigger: SWP (Pin ⑤ of CN713)
7) Playback the alignment tape for tracking. (WR5-1NP)
8) Check that the oscilloscope RF waveform is normal at the entrance and exit.
   If not normal, adjust according to the separate volume "8mm Video Mechanical Adjustment Manual IX M2000 Mechanism".
9) Perform "Processing after operations", after completing adjustment.

**Test point of CPC jig for SB**

| Pin No. | Signal Name | Pin No. | Signal Name |
|---|---|---|---|
| | BL | 15 | EVF VCO |
| 14 | EVF VG | | BL 4.75 |
| 9 | PB RF (MON) | | |
| 3 | BPF MONI | 6,8,10 | GND |
| | TMS | 7 | REC RF (RF IN) |
| | TDI | | TDO |
| 5 | SWP | | TCK |
| 4 | CAP FG | 2 | IR VIDEO |

**Note:** Pin No. are those of CN713.

*Table 5-2-1.*

**[Procedure after operations]**

1) Connect the adjustment remote commander, and turn on the HOLD switch.
2) Select page: 0, address: 01, and set data: 01.
3) Select page: F, address: 20, set data: 00, and press the PAUSE button of the adjustment remote commander.
4) Select page: 0, address: 01, and set data: 00.
5) Remove the power supply from the unit.

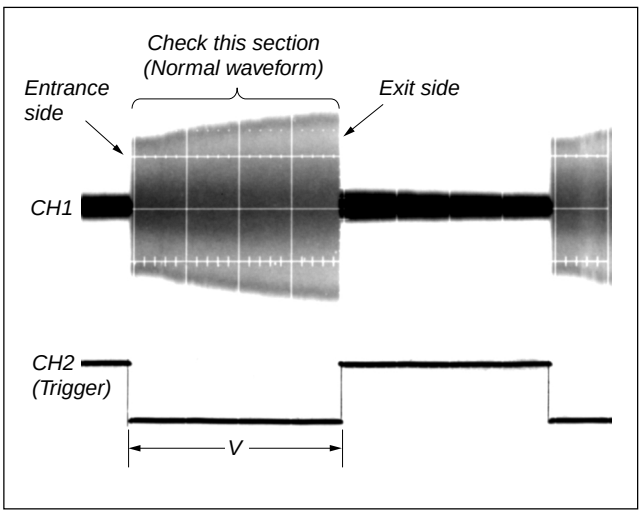


*Fig. 5-2-1.*

# 5-3. VIDEO SECTION ADJUSTMENTS

## 3-1. PREPARATIONS BEFORE ADJUSTMENTS

Use the following measuring instruments for video section adjustments.

### 3-1-1. Equipment to Required

1) TV monitor
2) Oscilloscope (dual-phenomenon, band width above 30 MHz with delay mode) (Unless specified otherwise, use a 10 : 1 probe.)
3) Frequency counter
4) Pattern generator with video output terminal
5) Digital voltmeter
6) Audio generator
7) Audio level meter
8) Audio distortion meter
9) Audio attenuator
10) Regulated power supply
11) NTSC alignment tapes
    - For tracking adjustment (WR5-1NP)
      Parts code : 8-967-995-02
    - For video frequency characteristics adjustment (WR5-7NE)
      Parts code : 8-967-995-13
    - For checking Standard 8 mode operations
      For LP (WR5-4NL)
      Parts code : 8-967-995-51
      For SP (WR5-5NSP)
      Parts code : 8-967-995-42
      **Note:** The following alignment tapes can also be used.
      WR5-4NSP (8-967-995-41)
    - For checking Hi8 mode operations
      For LP (WR5-8NLE)
      Parts code : 8-967-995-52
      For SP (WR5-8NSE)
      Parts code : 8-967-995-43
    - For BPF adjustment (WR5-11NS)
      Parts code : 8-967-995-71
13) Adjustment remote commander (J-6082-053-B)
14) CPC jig connector (J-6082-539-A)
15) I/F unit for LANC control (J-6082-521-A)

### 3-1-2. Precautions on Adjusting

1) Connect the adjustment remote commander to CN713 of VC-272 board via I/F unit for LANC control (J-6082-521-A) and CPC jig connector (J-6082-539-A). To operate the adjustment remote commander, connect the AC power adapter to the DC IN jack of I/F unit for LANC control, or connect the L series Info-LITHIUM battery to the battery terminal of I/F unit for LANC control.
2) The adjustments of this unit are performed in the VTR mode or camera mode.
   To set to the VTR mode, set the power switch to "PLAYER" or set the "Forced VTR Power ON mode" using the adjustment remote commander (Note1).
   To set to the Camera mode, set the power switch to "CAMERA" or set the "Forced Camera Power ON mode" using the adjustment remote commander (Note2).
   After completing adjustments, be sure to exit the "Forced VTR Power ON Mode" or "Forced Camera Power ON Mode". (Note3)
3) The front panel block (SI-033 board, microphone unit, video light) need not be connected. To remove, disconnect the following connector.
   SI-033 board CN752 (16P 0.5mm)
4) As removing the cabinet (R) assembly (removing CN709 of the VC-272 board) means removing the lithium 3V power supply (CF-2000 block BT001), data such as date, time, user-set menus will be lost. After completing adjustments, reset these data. If the cabinet (R) assembly has been removed, the self-diagnosis data, data on history of use (total drum rotation time etc.) will be lost. Before removing, note down the self-diagnosis data (data of page: 2, address: B0 to C6) and the data on history use (data of page: 2, address: A2 to AA and E0 to E2). (Refer to "5-4.Service Mode".)
5) The cabinet (R) assembly (CF-2000 block, LCD block) need not be connected to operate the VTR block. When removing the cabinet (R) assembly, disconnect the following connectors. (Note4)
   1. VC-272 board CN709 (22P, 0.5mm)
   2. VC-272 board CN701 (20P, 0.8mm)
6) The lens block (CD-354 board) need not be connected. To remove, disconnect the following connectors.
   1. VC-272 board CN271 (14P, 0.5mm)
   2. VC-272 board CN301 (24P, 0.5mm)
7) The EVF block (VF-150 board) need not be connected. To remove, disconnect the following connectors.
   VC-272 board CN705 (20P, 0.5mm)
8) The USB connector need not be connected. To remove, disconnect the following connectors. (CCD-TRV608)
   VC-272 board CN715 (6P, 0.5mm)
9) By setting the "Forced VTR Power ON mode" or "Forced Camera Power ON mode", the video section can be operate even if the control switch block (SS-2000) has been removed. When removing the control switch block (SS-2000), disconnect the following connector.
   VC-272 board CN711 (5P 0.8mm)

**Note1:** Setting the "Forced VTR Power ON" mode (VTR mode)
1) Select page: 0, address: 01, and set data: 01.
2) Select page: D, address: 10, set data: 02, and press the PAUSE button.

The above procedure will enable the VTR power to be turned on with the control switch block (SS-2000) removed.
After completing adjustments, be sure to exit the "Forced VTR Power ON mode".

**Note2:** Setting the "Forced Camera Power ON" mode (Camera mode)
1) Select page: 0, address: 01, and set data: 01.
2) Select page: D, address: 10, set data: 01, and press the PAUSE button.

The above procedure will enable the camera power to be turned on with the control switch block (SS-2000) removed.
After completing adjustments, be sure to exit the "Forced Camera Power ON mode".

**Note3:** Exiting the "Forced Power ON" mode
1) Select page: 0, address: 01, and set data: 01.
2) Select page: D, address: 10, set data: 00, and press the PAUSE button.
3) Select page: 0, address: 01, and set data: 00.

**Note4:** When the FK-2000 block or the CF-2000 block is removed, the VTR does an unusual movement for one minute after the power is turned on. So, operate the VTR by the adjustment remote commander (with the HOLD switch set in the OFF position) after it passes for more than one minute.

### 3-1-3. Adjusting Connectors

Some of the adjusting points of the video section are concentrated in CN713 of VC-272 board. Connect the Measuring instrument and the adjustment remote commander via the I/F unit for LANC control (J-6082-521-A) and CPC jig connector (J-6082-539-A) to CN713. To operate the adjustment remote commander, connect the AC power adapter to the DC IN jack of I/F unit for LANC control, or connect the L series Info-LITHIUM battery to the battery terminal of I/F unit for LANC control.
The following table shows the Pin No. and signal name of CN713.

| Pin No. | Signal Name | Pin No. | Signal Name |
|---|---|---|---|
| 1 | N.C. | 9 | PB RF |
| 2 | IR VIDEO | 10 | REG GND |
| 3 | BPF MONI | 11 | LANC OUT |
| 4 | CAP FG | 12 | LANC IN |
| 5 | RF SWP | 13 | XLANC POWER ON |
| 6 | REG GND | 14 | EVF VG |
| 7 | REC RF | 15 | VCO |
| 8 | REG GND | 16 | N.C. |

*Table 5-3-1.*

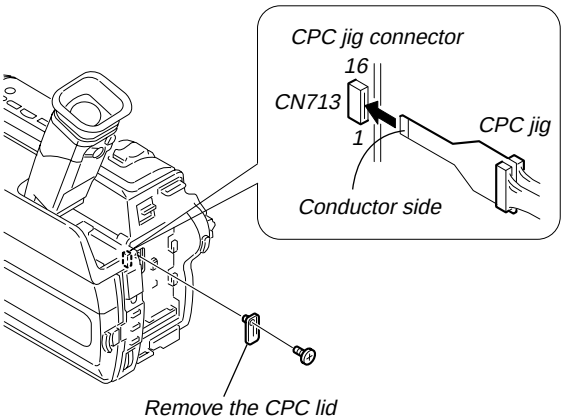


*Fig. 5-3-1.*

The following table shows the arrangement of the test points of I/F unit for LANC control. (Pin No. are those of CN713.)

| Pin No. | Signal Name | Pin No. | Signal Name |
|---|---|---|---|
| | BL | 15 | EVF VCO |
| 14 | EVF VG | | BL 4.75 |
| 9 | PB RF (MON) | | |
| 3 | BPF MONI | 6,8,10 | GND |
| | TMS | 7 | REC RF (RF IN) |
| | TDI | | TDO |
| 5 | SWP | | TCK |
| 4 | CAP FG | 2 | IR VIDEO |

*Table 5-3-2.*

### 3-1-4. Connecting the Equipment

Connect the measuring instruments as shown in Fig. 5-3-2 and perform the adjustments.

*Fig. 5-3-2.*

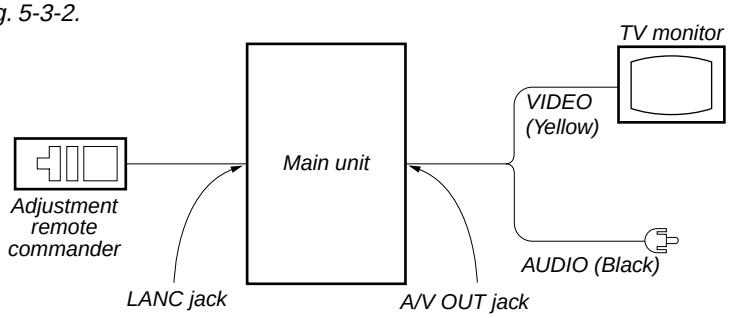

### 3-1-5. Alignment Tape

The following table lists alignment tapes which are available.
Use the tape specified in the signal column for each adjustment. If the type of tape to be used for checking operations is not specified, use whichever type.

**Alignment tape**

| Name | Recording mode | Tape type | Tape speed | Usage |
|---|---|---|---|---|
| Tracking (WR5-1NP) | Standard 8 | MP | SP | Tape path adjustment, Switching position adjustment |
| Video frequency characteristics (WR5-7NE) | Hi8 | ME | SP | Frequency characteristics adjustment |
| Operation check (WR5-5NSP) | Standard 8 | MP | SP | Operation check |
| Operation check (WR5-8NSE) | Hi8 | ME | SP | |
| Operation check (WR5-4NL) | Standard 8 | MP | LP | |
| Operation check (WR5-8NLE) | Hi8 | ME | LP | |
| BPF adjustment (WR5-11NS) | Standard 8 | MP | SP | BPF adjustment |

Tape type:
ME ..... Particle type metal tape
MP ..... Evaporated type metal tape

*Table. 5-3-3.*

Fig.5-3-3. shows the 75% color bar signals recorded on the alignment tape.
**Note:** Measure using the VIDEO terminal (Terminated at 75Ω).

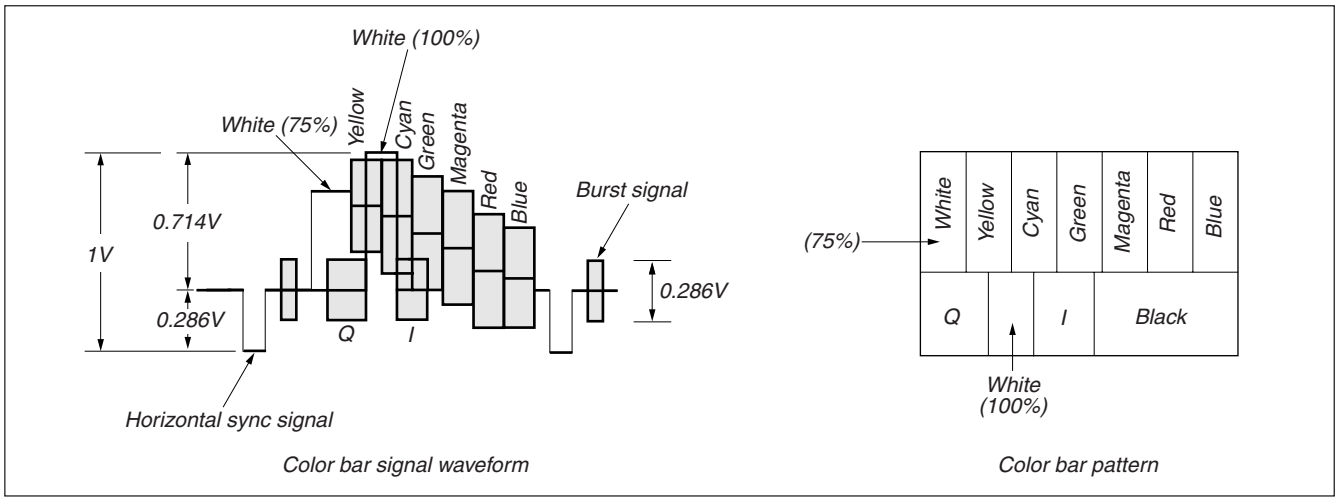


*Fig. 5-3-3. Color bar signal of alignment tapes*

### 3-1-6. Output Level and Impedance

Video output
Stereo minijack,
1Vp-p, 75Ω, unbalanced, sync negative
S video output
4-pin mini DIN
Luminance signal:
1Vp-p, 75Ω, unbalanced, sync negative
Chrominance signal:
0.286Vp-p, 75Ω, unbalanced
Audio output
Stereo minijack:
–7.5dBs, (at load impedance 47kΩ), impedance less than 2.2kΩ

### 3-1-7. Recording Mode (Standard 8/Hi8) switching

The record mode (Standard 8/Hi8) of this unit switches as shown in the following table. The playback mode (Standard 8/Hi8) switches automatically according to the recording mode of the tape played back.

| Tape Used | Recording Mode |
|---|---|
| ME | Hi8 |
| Hi8 MP | |
| MP | Standard 8 |

### 3-2. SYSTEM CONTROL SYSTEM ADJUSTMENT

#### 1. Initialization of D, E, F, 7 Page Data

If the D, E, F, 7 page data is erased due to some reason, perform "1-2. INITIALIZATION OF D, E, F, 7 PAGE DATA", of "5-1. CAMERA SECTION ADJUSTMENT"

### 3-3. SERVO ADJUSTMENT RadarW

#### 1. CAP FG Offset Adjustment (VC-272 board)

Set the Cap FG signal duty cycle to 50% to establish an appropriate capstan servo. If deviated, the uneven rotation of capstan and noise can occur in the LP mode.

| | |
|---|---|
| Mode | Camera recording (SP mode) |
| Subject | Arbitrary |
| Measurement Point | CAP FG (Pin ④ of CN713) |
| Measuring Instrument | Oscilloscope |
| Adjustment Page | F |
| Adjustment Address | 59 |
| Specified value | Duty = 50 ± 1 % |

**Adjusting method:**

| Order | Page | Address | Data | Procedure |
|---|---|---|---|---|
| 1 | 0 | 01 | 01 | Set the data. |
| 2 | 6 | 01 | 81 | Set the data, and press PAUSE button. |
| 3 | 6 | 02 | | Check that the data changes to "01". |
| 4 | 6 | 01 | 00 | Set the data, and press PAUSE button. |
| 5 | | | | Check that Duty of CAP FG signal satisfies the specified value. If not, repeat steps 2 to 5. |
| 6 | 0 | 01 | 00 | Set the data. |

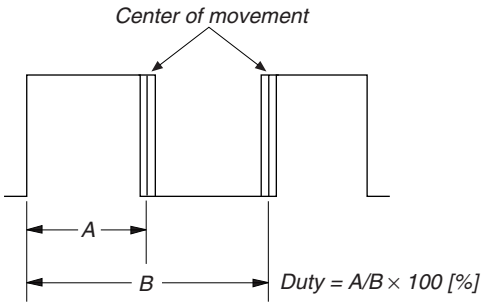


*Fig. 5-3-4.*

#### 2. Switching Position Adjustment (VC-272 board)

If deviated in this case causes switching noise or jitter on the played back screen.

| | |
|---|---|
| Mode | Playback |
| Signal | Alignment tape:<br>For tracking adjustment (WR5-1NP) |
| Measurement Point | CH1: SWP (Pin ⑤ of CN713)<br>CH2: PB RF (Pin ⑨ of CN713) |
| Measuring Instrument | Oscilloscope |
| Adjustment Page | F |
| Adjustment Address | 5A, 5B |
| Specified Value | t1 = 0 ± 10 μsec |

**Adjusting Method:**

| Order | Page | Address | Data | Procedure |
|---|---|---|---|---|
| 1 | 0 | 01 | 01 | Set the data. |
| 2 | F | 20 | 40 | Set the data, and press PAUSE button. |
| 3 | F | 5A | | Change the data and minimize "t1". (Coarse adjustment) |
| 4 | F | 5A | | Press PAUSE button |
| 5 | F | 5B | | Change the data and adjust so that the switching position (t1) becomes the specified value. (Fine adjustment) |
| 6 | F | 5B | | Press PAUSE button |
| 7 | F | 20 | 00 | Set the data, and press PAUSE button. |
| 8 | 0 | 01 | 00 | Set the data. |

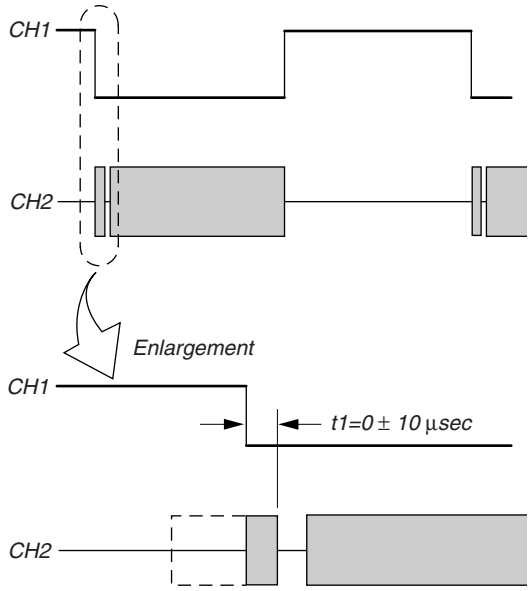


*Fig. 5-3-5.*

## 3-4. VIDEO SYSTEM ADJUSTMENTS

Video system adjustments must be performed in the following order.

**[Adjusting Order]**

1. 28MHz origin oscillation adjustment
2. AFC f0 adjustment
3. Y OUT level adjustment
4. C OUT level adjustment
5. REC Y current adjustment
6. REC C/REC AFM current adjustment

### 1. 28 MHz Origin Oscillation Adjustment (VC-272 board)

Set the frequency of the clock for synchronization.
If deviated, the synchronization will be disrupted and the color will become inconsistent.

| | |
|---|---|
| Mode | VTR stop |
| Signal | No signal |
| Measurement Point | R200 (Pin 79 of IC151) |
| Measuring Instrument | Frequency counter |
| Adjustment Page | F |
| Adjustment Address | 45 |
| Specified Value | f = 3579545 ± 17Hz |

**Adjusting method:**

| Order | Page | Address | Data | Procedure |
|---|---|---|---|---|
| 1 | 0 | 01 | 01 | Set the data. |
| 2 | 6 | 61 | 30 | Set the data. |
| 3 | 2 | 01 | 41 | Set the data, and press PAUSE button. |
| 4 | F | 45 | | Change the data and set the frequency (f) to the specified value. |
| 5 | F | 45 | | Press PAUSE button. |
| 6 | 2 | 01 | 00 | Set the data, and press PAUSE button. |
| 7 | 6 | 61 | 10 | Set the data. |
| 8 | 0 | 01 | 00 | Set the data. |

**VC-272 board**

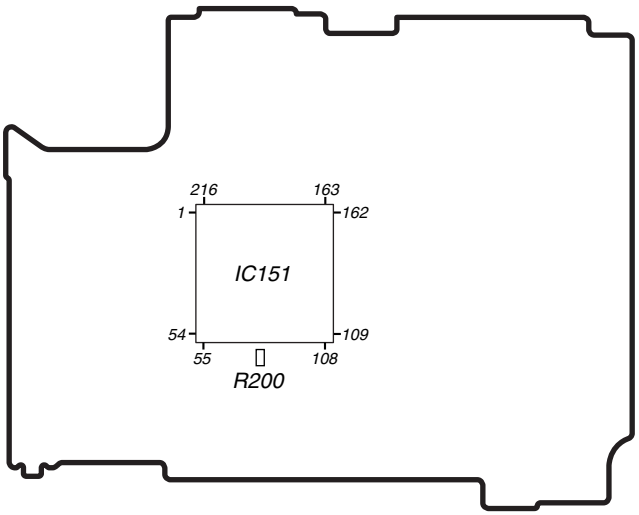


### 2. AFC f0 Adjustment (VC-272 board) RadarW

Adjust the pull-in range of the A/D converted clock generator during playback.

| | |
|---|---|
| Mode | VTR stop |
| Signal | No signal |
| Adjustment Page | F |
| Adjustment Address | 5D |

**Note1:** Insert a plug into the S VIDEO or the A/V jack.

**Adjusting method:**

| Order | Page | Address | Data | Procedure |
|---|---|---|---|---|
| 1 | 0 | 01 | 01 | Set the data. |
| 2 | F | 5D | 50 | Set the data, and press PAUSE button. |
| 3 | 2 | 01 | 4D | Set the data, and press PAUSE button. |
| 4 | | | | Wait for 0.5 sec. |
| 5 | 6 | 01 | C5 | Set the data, and press PAUSE button. |
| 6 | 6 | 02 | | Check that the data changes to “01”. (Note2) |
| 7 | 2 | 01 | 00 | Set the data, and press PAUSE button. |
| 8 | 6 | 01 | 00 | Set the data, and press PAUSE button. |
| 9 | 0 | 01 | 00 | Set the data. |

**Note2:** The adjustment data will be automatically input to page: F, address: 5D.

### 3. Y OUT Level Adjustment (VC-272 board)

Set the Y signal output level. (Adjust the D/A converter out put level of IC151.)

| | |
|---|---|
| Mode | VTR stop |
| Signal | No signal |
| Measurement Point | Y signal terminal of S VIDEO terminal (75Ω terminated) |
| Measuring Instrument | Oscilloscope |
| Adjustment Page | F |
| Adjustment Address | 5E |
| Specified Value | A = 286 ± 5mV |

**Note1:** Insert a plug into the S video terminal.

**Adjusting method:**

| Order | Page | Address | Data | Procedure |
|---|---|---|---|---|
| 1 | 0 | 01 | 01 | Set the data. |
| 2 | 2 | 01 | 41 | Set the data, and press PAUSE button. |
| 3 | 6 | 61 | 30 | Set the data,. |
| 4 | F | 5E | | Change the data and set the SYNC level (A) to the specified value. |
| 5 | F | 5E | | Press PAUSE button. |
| 6 | 2 | 01 | 00 | Set the data, and press PAUSE button. |
| 7 | 6 | 61 | 10 | Set the data. |
| 8 | 0 | 01 | 00 | Set the data. |

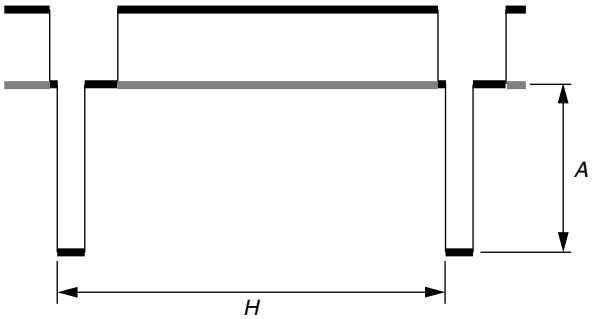


*Fig. 5-3-6.*

### 4. C OUT Level Adjustment (VC-272 board)

Set the chroma signal output level. (Adjust the D/A converter out put level of IC151.)

| | |
|---|---|
| Mode | VTR stop |
| Signal | No signal |
| Measurement Point | Chroma signal terminal of S VIDEO terminal (75Ω terminated) |
| Measuring Instrument | Oscilloscope |
| Adjustment Page | F |
| Adjustment Address | 5F |
| Specified Value | A = 286 ± 5mV |

**Note1:** Insert a plug into the S video terminal.

**Adjusting method:**

| Order | Page | Address | Data | Procedure |
|---|---|---|---|---|
| 1 | 0 | 01 | 01 | Set the data. |
| 2 | 2 | 01 | 41 | Set the data, and press PAUSE button. |
| 3 | 6 | 61 | 30 | Set the data,. |
| 4 | F | 5F | | Change the data and set the burst level (A) to the specified value. |
| 5 | F | 5F | | Press PAUSE button. |
| 6 | 2 | 01 | 00 | Set the data, and press PAUSE button. |
| 7 | 6 | 61 | 10 | Set the data. |
| 8 | 0 | 01 | 00 | Set the data. |

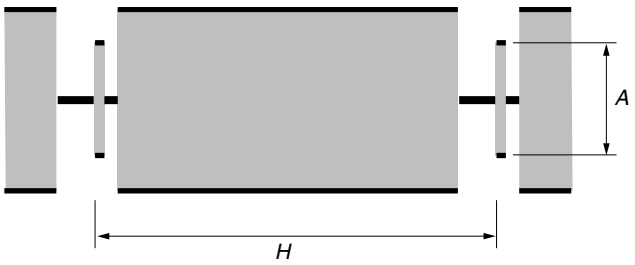


*Fig. 5-3-7.*

### 5. REC Y Current Adjustment (VC-272 board)

Adjust the Y FM signal recording current.

| | |
|---|---|
| Mode | VTR recording (SP mode) |
| Signal | No signal |
| Measurement Point | REC RF (Pin ⑦ of CN713) |
| Measuring Instrument | Oscilloscope<br>(20 MHz BW LIMIT: OFF) |
| Adjustment Page | F |
| Adjustment Address | 62, 63 |
| Specified Value | A = 235 ± 5mV |

**Note1:** Insert a plug into the S VIDEO or the A/V jack.

**Note2:** Don't disconnect the DC power supply of the camcorder during the following adjustments.
When the following symptom occurs, reset the data of D page to the values written down.
1) The power is shut off so that unit cannot operate.

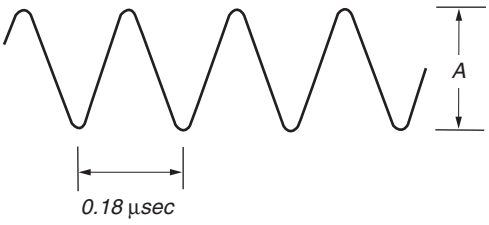


*Fig. 5-3-8.*

**Adjusting method:**

| Order | Page | Address | Data | Procedure |
|---|---|---|---|---|
| 1 | | | | Set to the stop mode. |
| 2 | 0 | 01 | 01 | Set the data. |
| 3 | D | 14 | | Write down the data. |
| 4 | D | 14 | 06 | Set the data, and press PAUSE button. |
| 5 | D | 15 | | Write down the data. |
| 6 | D | 15 | 6D | Set the data, and press PAUSE button. |
| 7 | | | | Set to VTR recording mode. (Note3) |
| 8 | E | 9F | | Write down the data. |
| 9 | E | 9F | 06 | Set the data, and press PAUSE button. |
| 10 | F | 69 | | Write down the data. |
| 11 | F | 69 | 00 | Set the data, and press PAUSE button. |
| 12 | 2 | 01 | 41 | Set the data, and press PAUSE button. |
| 13 | 6 | 63 | 01 | Set the data. |
| 14 | F | 63 | | Change the data and set the Y signal level (A) to the specified value. |
| 15 | F | 63 | | Press PAUSE button. |
| 16 | F | 63 | | Read the data, and this data is named $D_{63}$. |
| 17 | F | 62 | $D_{63}$ | Set the data, and press PAUSE button. |
| 18 | 6 | 63 | 00 | Set the data. |
| 19 | 2 | 01 | 00 | Set the data, and press PAUSE button. |
| 20 | F | 69 | | Set the data written down at step 10, and press PAUSE button. |
| 21 | E | 9F | | Set the data written down at step 8, and press PAUSE button. |
| 22 | D | 14 | | Set the data written down at step 3, and press PAUSE button. |
| 23 | D | 15 | | Set the data written down at step 5, and press PAUSE button. |
| 24 | 0 | 01 | 00 | Set the data. |

**Note3:** Use the REC buttons of the adjustment remote commander (with the HOLD switch set in the OFF position).

## 6. REC C/AFM Current Adjustment

### 6-1. Preparations

| Order | Page | Address | Data | Procedure |
|---|---|---|---|---|
| 1 | 0 | 01 | 01 | Set the data. |
| 2 | D | 14 | | Write down the data. |
| 3 | D | 14 | 06 | Set the data, and press PAUSE button. |
| 4 | D | 15 | | Write down the data. |
| 5 | D | 15 | 6D | Set the data, and press PAUSE button. |

**Note:** Don't disconnect the DC power supply of the camcorder during the following adjustments.
When the following symptom occurs, reset the data of D page to the values written down.
1) The power is shut off so that unit cannot operate.

### 6-2. REC C Current Check (VC-272 board)

Check the recording current level of the REC Chroma signal. If it is too low, chroma signal noise in played back picture will be increased. If too high, Y signal noises will increase and white modulation noises will be produced.

| | |
|---|---|
| Mode | VTR recording (SP mode) |
| Signal | No signal |
| Measurement Point | REC RF (Pin ⑦ of CN713) |
| Measuring Instrument | Oscilloscope (20 MHz BW LIMIT: OFF) |
| Specified Value | A = 50.8 ± 3.0mV |

**Note1:** Insert a plug into the S VIDEO or the A/V jack.

**Adjusting method:**

| Order | Page | Address | Data | Procedure |
|---|---|---|---|---|
| 1 | | | | Insert a tape, and set to VTR recording mode. (Note2) |
| 2 | 0 | 01 | 01 | Set the data. |
| 3 | 2 | 01 | 41 | Set the data, and press PAUSE button. |
| 4 | 6 | 61 | 30 | Set the data. |
| 5 | E | 9F | | Write down the data. |
| 6 | E | 9F | 05 | Set the data, and press PAUSE button. |
| 7 | F | 69 | | Write down the data. |
| 8 | F | 69 | 00 | Set the data, and press PAUSE button. |
| 9 | | | | Check that the REC chroma signal level (A) satisfies the specified value, and write down the signal level. |
| 10 | F | 69 | | Set the data written down at step 7, and press PAUSE button. |
| 11 | E | 9F | | Set the data written down at step 5, and press PAUSE button. |
| 12 | 6 | 61 | 10 | Set the data. |
| 13 | 2 | 01 | 00 | Set the data, and press PAUSE button. |
| 14 | 0 | 01 | 00 | Set the data. |
| 15 | | | | Perform "REC AFM Current Adjustment" and "Processing after completed adjustment". |

**Note2:** Use the REC buttons of the adjustment remote commander (with the HOLD switch set in the OFF position).

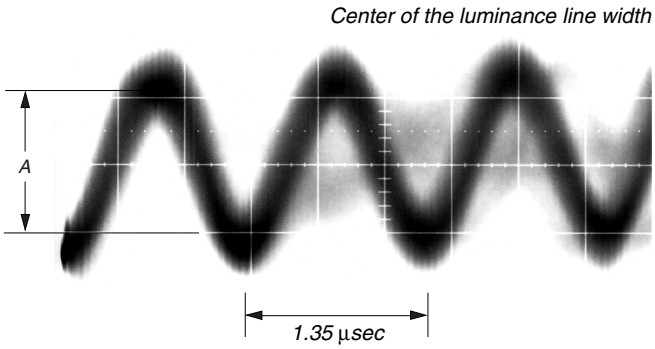


*Fig. 5-3-9.*

### 6-3. REC AFM Current Adjustment (VC-272 board)

Set the recording levels of the REC AFM signal. If the level is too low, the audio S/N will be deteriorated. If too high, color beets will be produced on the self-recording / playback image.

| | |
|---|---|
| Mode | VTR recording (SP mode) |
| Signal | No signal |
| Measurement Point | REC RF (Pin ⑦ of CN713) |
| Measuring Instrument | Oscilloscope<br>(20 MHz BW LIMIT: OFF) |
| Adjustment Page | F |
| Adjustment Address | 69 |
| Specified Value | A = (REC Chroma signal level) × 0.292 ± 0.9mV (Note1) |

**Note1:** REC chroma signal level is written down at step 9 of "REC C Current Check".
**Note2:** Insert a plug into the S VIDEO or the A/V jack.

**Adjusting method:**

| Order | Page | Address | Data | Procedure |
|---|---|---|---|---|
| 1 | | | | Insert a tape, and set to recording mode. (Note3) |
| 2 | 0 | 01 | 01 | Set the data. |
| 3 | 2 | 01 | 41 | Set the data, and press PAUSE button. |
| 4 | E | 9F | | Write down the data. |
| 5 | E | 9F | 07 | Set the data, and press PAUSE button. |
| 6 | F | 69 | | Change the data and set the REC AFM signal level (A) to the specified value. |
| 7 | F | 69 | | Press PAUSE button. |
| 8 | E | 9F | | Set the data written down at step 4, and press PAUSE button. |
| 9 | 2 | 01 | 00 | Set the data, and press PAUSE button. |
| 10 | 0 | 01 | 00 | Set the data. |
| 11 | | | | Perform "Processing after completed adjustment". |

**Note3:** Use the REC buttons of the adjustment remote commander (with the HOLD switch set in the OFF position).

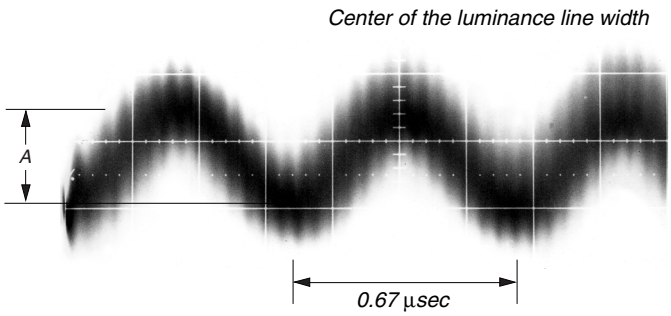


*Fig. 5-3-10.*

### 6-4. Processing after completed adjustment

| Order | Page | Address | Data | Procedure |
|---|---|---|---|---|
| 1 | 0 | 01 | 01 | Set the data. |
| 2 | D | 14 | | Set the data written down at step 2 of "6-1. Preparations", and press PAUSE button. |
| 3 | D | 15 | | Set the data written down at step 4 of "6-1. Preparations", and press PAUSE button. |
| 4 | 0 | 01 | 00 | Set the data. |

## 3-5. AUDIO SYSTEM ADJUSTMENTS

**[Connecting the measuring instruments for the audio]**

Connect the audio system measuring instruments in addition to the video system measuring instruments as shown in Fig. 5-3-11.

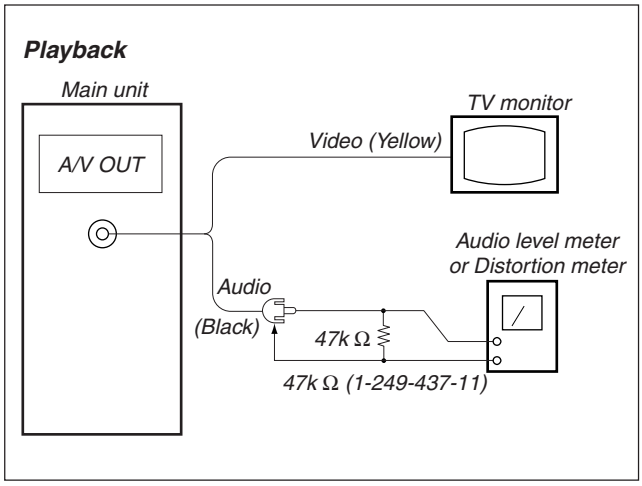


*Fig. 5-3-11.*

### 1. 1.5 MHz Deviation Adjustment (VC-272 board)

Adjust to the optimum 1.5MHz audio FM signal deviation.
If the adjustment is not correct, its playback level will differ from that of other units.

| | |
|---|---|
| Mode | Playback |
| Signal | Alignment tape:<br>For checking operation<br>(WR5-5NSP) |
| Measurement Point | Audio terminal of A/V OUT jack |
| Measuring Instrument | Audio level meter |
| Adjustment Page | F |
| Adjustment Address | 73 |
| Specified Value | –7.5 ± 2.0dBs |

**Adjusting method:**

| Order | Page | Address | Data | Procedure |
|---|---|---|---|---|
| 1 | 0 | 01 | 01 | Set the data. |
| 2 | F | 73 | | Change the data and set the 400Hz audio signal level to the specified value. |
| 3 | F | 73 | | Press PAUSE button. |
| 4 | 0 | 01 | 00 | Set the data. |

### 2. BPF $f_0$ Adjustment (VC-272 board)

Sets the BPF passing frequency of IC351 so that the AFM signal can separate from the playback RF signal properly. If deviated. the mono/stereo mode will be differentiated incorrectly, and noises and distortions will increase during high volume playback.

| | |
|---|---|
| Mode | Playback |
| Signal | Alignment tape:<br>For BPF adjustment<br>(WR5-11NS) |
| Measurement Point | Audio terminal of A/V OUT jack |
| Measuring Instrument | Distortion meter |
| Adjustment Page | F |
| Adjustment Address | 74 |
| Specified Value | The distortion rate should be minimum. |

**Adjusting method:**

| Order | Page | Address | Data | Procedure |
|---|---|---|---|---|
| 1 | 0 | 01 | 01 | Set the data. |
| 2 | F | 74 | | Change the data and minimize the distortion rate. |
| 3 | F | 74 | | Press PAUSE button. |
| 4 | 0 | 01 | 00 | Set the data. |

# 5-4. SERVICE MODE

## 4-1. ADJUSTMENT REMOTE COMMANDER

The adjustment remote commander is used for changing the calculation coefficient in signal processing, EVR data, etc. The adjustment remote commander performs bi-directional communication with the unit using the remote commander signal line (LANC). The resultant data of this bi-directional communication is written in the non-volatile memory.

### 1. Using the Adjustment Remote Commander

1) Connect the adjustment remote commander to CN713 of VC-272 board via I/F unit for LANC control (J-6082-521-A) and CPC jig connector (J-6082-539-A). To operate the adjustment remote commander, connect the AC power adapter (8.4Vdc) to the DC IN jack of I/F unit for LANC control, or connect the L series Info-LITHIUM battery to the battery terminal of I/F unit for LANC control.
2) Set the HOLD switch of the adjustment remote commander to "HOLD" (SERVICE position). If it has been properly connected, the LCD on the adjustment remote commander will display as shown in Fig. 5-4-1.

*Fig. 5-4-1.*

3) Operate the adjustment remote commander as follows.
   - Changing the page
     The page increases when the EDIT SEARCH+ button is pressed, and decreases when the EDIT SEARCH– button is pressed. There are altogether 16 pages, from 0 to F.

| Hexadecimal notation | 0 | 1 | 2 | 3 | 4 | 5 | 6 | 7 | 8 | 9 | A | B | C | D | E | F |
|---|---|---|---|---|---|---|---|---|---|---|---|---|---|---|---|---|
| LCD Display | 0 | 1 | 2 | 3 | 4 | 5 | 6 | 7 | 8 | 9 | A | b | c | d | E | F |
| Decimal notation conversion value | 0 | 1 | 2 | 3 | 4 | 5 | 6 | 7 | 8 | 9 | 10 | 11 | 12 | 13 | 14 | 15 |

   - Changing the address
     The address increases when the FF (▶▶) button is pressed, and decreases when the REW (◀◀) button is pressed. There are altogether 256 addresses, from 00 to FF.
   - Changing the data (Data setting)
     The data increases when the PLAY (▶) button is pressed, and decreases when the STOP (■) button is pressed. There are altogether 256 data, from 00 to FF.
   - Writing the adjustment data
     The PAUSE button must be pressed to write the adjustment data (D, E, F, 7 page) in the nonvolatile memory. (The new adjusting data will not be recorded in the nonvolatile memory if this step is not performed.)
4) After completing all adjustments, turn off the main power supply (8.4 V) once.

### 2. Precautions Upon Using the Adjustment Remote Commander

Mishandling of the adjustment remote commander may erase the correct adjustment data at times. To prevent this, it is recommended that all adjustment data be noted down before beginning adjustments and new adjustment data after each adjustment.

## 4-2. DATA PROCESS

The calculation of the DDS display and the adjustment remote commander display data (hexadecimal notation) are required for obtaining the adjustment data of some adjustment items. In this case, after converting the hexadecimal notation to decimal notation, calculate and convert the result to hexadecimal notation, and use it as the adjustment data. Indicates the hexadecimal-decimal conversion table.

**Hexadecimal-decimal Conversion Table**

②

| Upper digit of hexadecimal \ Lower digit of hexadecimal | 0 | 1 | 2 | 3 | 4 | 5 | 6 | 7 | 8 | 9 | A (A) | B (b) | C (c) | D (d) | E (E) | F (F) |
|---|---|---|---|---|---|---|---|---|---|---|---|---|---|---|---|---|
| 0 | 0 | 1 | 2 | 3 | 4 | 5 | 6 | 7 | 8 | 9 | 10 | 11 | 12 | 13 | 14 | 15 |
| 1 | 16 | 17 | 18 | 19 | 20 | 21 | 22 | 23 | 24 | 25 | 26 | 27 | 28 | 29 | 30 | 31 |
| 2 | 32 | 33 | 34 | 35 | 36 | 37 | 38 | 39 | 40 | 41 | 42 | 43 | 44 | 45 | 46 | 47 |
| 3 | 48 | 49 | 50 | 51 | 52 | 53 | 54 | 55 | 56 | 57 | 58 | 59 | 60 | 61 | 62 | 63 |
| 4 | 64 | 65 | 66 | 67 | 68 | 69 | 70 | 71 | 72 | 73 | 74 | 75 | 76 | 77 | 78 | 79 |
| 5 | 80 | 81 | 82 | 83 | 84 | 85 | 86 | 87 | 88 | 89 | 90 | 91 | 92 | 93 | 94 | 95 |
| 6 | 96 | 97 | 98 | 99 | 100 | 101 | 102 | 103 | 104 | 105 | 106 | 107 | 108 | 109 | 110 | 111 |
| 7 | 112 | 113 | 114 | 115 | 116 | 117 | 118 | 119 | 120 | 121 | 122 | 123 | 124 | 125 | 126 | 127 |
| 8 | 128 | 129 | 130 | 131 | 132 | 133 | 134 | 135 | 136 | 137 | 138 | 139 | 140 | 141 | 142 | 143 |
| 9 | 144 | 145 | 146 | 147 | 148 | 149 | 150 | 151 | 152 | 153 | 154 | 155 | 156 | 157 | 158 | 159 |
| A (A) | 160 | 161 | 162 | 163 | 164 | 165 | 166 | 167 | 168 | 169 | 170 | 171 | 172 | 173 | 174 | 175 |
| ① B (b) | 176 | 177 | 178 | 179 | 180 | 181 | 182 | 183 | 184 | 185 | 186 | 187 | 188 | 189 | 190 | 191 |
| C (c) | 192 | 193 | 194 | 195 | 196 | 197 | 198 | 199 | 200 | 201 | 202 | 203 | 204 | 205 | 206 | 207 |
| D (d) | 208 | 209 | 210 | 211 | 212 | 213 | 214 | 215 | 216 | 217 | 218 | 219 | 220 | 221 | 222 | 223 |
| E (E) | 224 | 225 | 226 | 227 | 228 | 229 | 230 | 231 | 232 | 233 | 234 | 235 | 236 | 237 | 238 | 239 |
| F (F) | 240 | 241 | 242 | 243 | 244 | 245 | 246 | 247 | 248 | 249 | 250 | 251 | 252 | 253 | 254 | 255 |

**Note:** The characters shown in the parenthesis ( ) shown the display on the adjustment remote commander.

**(Example)** If the DDS display or the adjustment remote commander shows BD (bd);
Because the upper digit of the adjustment number is B (b), and the lower digit is D (d), the meeting point "189" of ① and ② in the above table is the corresponding decimal number.

*Table. 5-4-1.*

## 4-3. SERVICE MODE

**Note:** After the completion of the all adjustments, cancel the service mode by either of the following ways.

1) Unplug the main power supply and remove the lithium battery. (In this case, date and time and menu setting have been set by users are canceled. Perform resetting.)
2) After data on page: D and F is restored, return data of the address: 01 on page: 0 to 00. And when data on page: 2 is changed, return the data to the original condition.

### 1. Test Mode Setting

Set/release each test mode. Set page: 0, address: 01, data: 01 before setting the data of page D and F.

| Page F | Address 20 |
|---|---|

| Data | Function |
|---|---|
| 00 | Normal |
| 01 | Test mode<br>Various emergency prohibitions and releases Drum emergency, capstan emergency, loading motor emergency, reel emergency, tape top and end, DEW detection |

| Page D | Address 10 |
|---|---|

| Data | Function |
|---|---|
| 00 | Normal |
| 01 | Camera power ON |
| 02 | VTR power ON |
| 03 | Camera + VTR power ON |

* For page D and F, the data set will be recorded in the nonvolatile memory by pressing the PAUSE button on the adjustment remote commander. Take note that, in this case, the test mode will not be released even if the main power has been turned off.
* Be sure to return the data of page: F, address: 20 to 00, and the data of page : D, address: 10 to 00 after completing adjustments/ repairs and press the PAUSE button of the adjustment remote commander. And set page: 0, address: 01, data: 00.

## 2. Emergency Memory Address

| Page F | Address 10 to 1B |
|---|---|

| Address | Contents |
|---|---|
| 10 | 1st EMG code |
| 12 | Upper: MSW code when the mechanism starts shifting the 1st time<br>Lower: MSW code when the 1st emergency occurs |
| 13 | Lower: Target MSW code of the 1st emergency occurs |
| 14 | 2nd EMG code |
| 16 | Upper: MSW code when the mechanism starts shifting the 2nd time<br>Lower: MSW code when the 2nd emergency occurs |
| 17 | Lower: Target MSW code of the 2nd emergency occurs |
| 18 | Last EMG code |
| 1A | Upper: MSW code when the mechanism starts shifting the last time<br>Lower: MSW code when the last emergency occurs |
| 1B | Lower: Target MSW code of the last emergency occurs |

When there are no emergency, data 00 will be written in the above addresses (10 to 1B). When the first emergency occurs, the data corresponding to the emergency will be written in the address (10 to 13) for this first emergency. In the same way, when the second emergency occurs, the data corresponding to the emergency will be written in the address (14 to 17) for this second emergency.
The data corresponding to the emergency occurring the last will be written in the address (18 to 1B) for this last emergency.
Therefore the data of addresses 18 to 1B are renewed each time an emergency occurs.

**Note:** After completing adjustments, be sure to initialize the data of address 10 to 1B to “00”.

**Initializing method:**

| Order | Page | Address | Data | Procedure |
|---|---|---|---|---|
| 1 | 0 | 01 | 01 | Set the data. |
| 2 | 6 | 00 | 9F | Set the data. |
| 3 | 6 | 01 | 9F | Set the data, and press PAUSE button. |
| 4 | 0 | 01 | 00 | Set the data. |

### 2-1. EMG code (Emergency code)

The codes shown in the following table which correspond to errors that occur are recorded in addresses 10, 14, and 18.

| Code | Type of Emergency |
|---|---|
| 00 | No error |
| 10 | Loading motor time-out during load |
| 11 | Loading motor time-out during unload |
| 20 | T reel emergency (reel slack) during unloading |
| 21 | S reel emergency (reel slack) during unloading |
| 22 | T reel emergency |
| 23 | S reel emergency |
| 30 | FG emergency at the start up of the capstan |
| 31 | FG emergency during the normal rotation of the capstan |
| 40 | FG emergency at the start up of the drum |
| 41 | PG emergency at the start up of the drum |
| 42 | FG emergency during the normal rotation of the drum |
| 43 | PG emergency during the normal rotation of the drum |
| 44 | Phase emergency during the normal rotation of the drum |

### 2-2. MSW codes

- The lower parts of the data of addresses 12, 16 and 1A represent the MSW codes (mode switch, mechanism position) when errors occurs.
- The upper parts of the data of addresses 12, 16 and 1A represent, when the mechanism position is to be moved, the MSW codes at the start of movement (when moving the loading motor).
- The lower parts of the data of addresses 13, 17 and 1B represent the MSW codes of the desired movement when the mechanism position is to be moved.

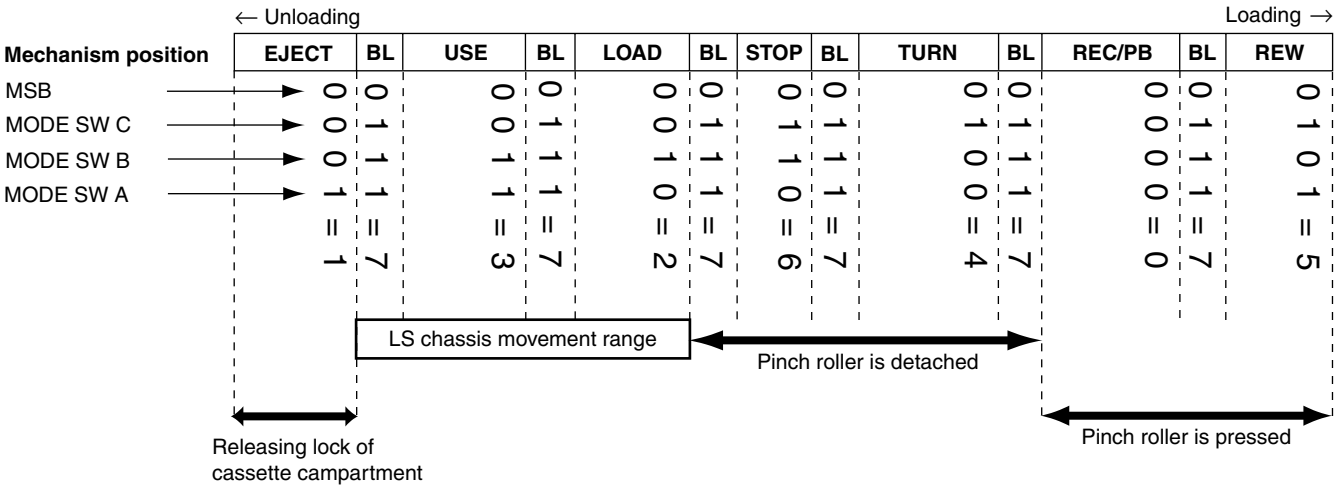


| Mechanism Position | MSW Code | Contents |
|---|---|---|
| EJECT | 1 | Position at which the cassette compartment lock is released. The mechanism will not move any further in the unloading direction. |
| BL | 7 | BLANC code. Between two codes. The mechanism will not be stopped by this code while it is operating. |
| USE | 3 | EJECT completion position. When the cassette is ejected, the mechanism will stop at this position. |
| LOAD | 2 | Code during loading/unloading. Code that is used while the LS chassis is moving. |
| STOP | 6 | Normal stop position. The pinch roller separates, the tension regulator returns, and the brakes of both reels turn on. |
| TURN | 4 | Position at which is used when the pendulum gear swings from S to T or from T to S. |
| REC/PB | 0 | PB, REC, CUE, REV, PAUSE, FF positions.<br>The pinch roller is pressed and tension regulator is on. |
| REW | 5 | REW position. REW are carried at this position.<br>The mechanism will not move any further in the loading direction. |

### 3. Bit Value Discrimination

Bit values must be discriminated using the display data of the adjustment remote commander for the following items. Us the table below to discriminate if the bit value is “1” or “0”.

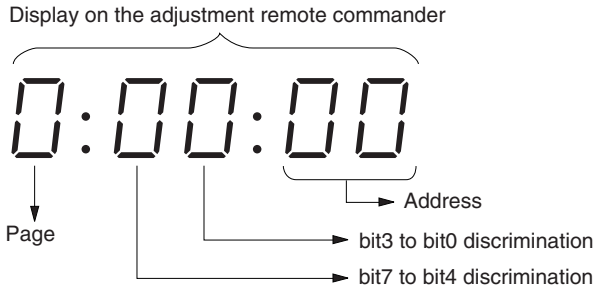


(Example) If the remote commander display is “8E”, bit value from bit 7 to bit 4 can be discriminated from the column Ⓐ, and those from bit 3 to bit 0 from column Ⓑ.

| | Display on the adjustment remote commander | Bit values | | | |
|---|---|---|---|---|---|
| | | bit3 or bit7 | bit2 or bit6 | bit1 or bit5 | bit0 or bit4 |
| | 0 | 0 | 0 | 0 | 0 |
| | 1 | 0 | 0 | 0 | 1 |
| | 2 | 0 | 0 | 1 | 0 |
| | 3 | 0 | 0 | 1 | 1 |
| | 4 | 0 | 1 | 0 | 0 |
| | 5 | 0 | 1 | 0 | 1 |
| | 6 | 0 | 1 | 1 | 0 |
| | 7 | 0 | 1 | 1 | 1 |
| Ⓐ | 8 | 1 | 0 | 0 | 0 |
| | 9 | 1 | 0 | 0 | 1 |
| | A (A) | 1 | 0 | 1 | 0 |
| | B (b) | 1 | 0 | 1 | 1 |
| | C (C) | 1 | 1 | 0 | 0 |
| | D (d) | 1 | 1 | 0 | 1 |
| Ⓑ | E (E) | 1 | 1 | 1 | 0 |
| | F (F) | 1 | 1 | 1 | 1 |

### 4. Switch check (1)

| | |
|---|---|
| Page 2 | Address 43 |

| Bit | Function | When bit value = 1 | When bit value = 0 |
|---|---|---|---|
| 0 | POWER SW (VTR MODE SW) (SS-2000 block S001) | OFF | ON (PLAYER) |
| 1 | POWER SW (CAM MODE SW) (SS-2000 block S001) | OFF | ON (CAMERA) |
| 2 | START/STOP SW (SS-2000 block S002) | OFF | ON |
| 3 | EJECT SW (FK-2000 block S001) | OFF | ON |
| 4 | CC DOWN SW (Mechanism chassis) | OFF (UP) | ON (DOWN) |
| 5 | | | |
| 6 | | | |
| 7 | | | |

**Using method:**

1) Select page: 2, address: 43.
2) By discriminating the bit value of display data, the state of the switch can be discriminated.

### 5. Switch check (2)

| | |
|---|---|
| Page 2 | Address 49 |

| Bit | Function | When bit value = 1 | When bit value = 0 |
|---|---|---|---|
| 6 | A/V OUT jack (FP-397 flexible) | Used | Not used |
| 7 | S VIDEO jack (FP-397 flexible) | Not used | Used |

**Using method:**

1) Select page: 2, address: 49.
2) By discriminating the bit value of display data, the state of the switch can be discriminated.

### 6. Switch check (3)

| Page 2 | Address 60 to 65 |
|---|---|

**Using method:**

1) Select page: 2, address: 60 to 65.
2) By discriminating the display data, the pressed key can be discriminated.

| Address | Data | | | | | | | |
|---|---|---|---|---|---|---|---|---|
| | 00 to 0C | 0D to 24 | 25 to 3F | 40 to 5D | 5E to 81 | 82 to AA | AB to D7 | D8 to FF |
| 60 (KEY AD0) (IC503 ⑨③) | | LIGHT (FK-2000) (S002) *1 | STOP (FK-2000) (S005) | FF (FK-2000) (S007) | | | | No key input |
| 61 (KEY AD1) (IC503 ⑨④) | | | PAUSE (FK-2000) (S006) | REW (FK-2000) (S008) | PLAY (FK-2000) (S009) | | | No key input |
| 62 (KEY AD2) (IC503 ⑨⑤) | | TITLE (CF-2000) (S006) | EXPOSURE (CF-2000) (S009) | VOL+ (CF-2000) (S0012) | VOL– (CF-2000) (S0015) | DATE (CF-2000) (S022) | PANEL CLOSE (CF-2000) (S001) | PANEL OPEN (CF-2000) (S001) |
| 63 (KEY AD3) (IC503 ⑨⑥) | | DISPLAY (CF-2000) (S005) | TIME (CF-2000) (S023) | | E DUBBING (CF-2000) (S013) | COUNTER RESET (CF-2000) (S017) | EXEC (CF-2000) (S019) | No key input |
| 64 (KEY AD4) (IC503 ⑨⑦) | MENU (CF-2000) (S002) | FADER (CF-2000) (S004) | | END SEARCH (CF-2000) (S010) | | BACK LIGHT (CF-2000) (S016) | FOCUS (CF-2000) (S018) | No key input |
| 65 (KEY AD5) (IC503 ⑨⑧) | PANEL REVERSE (PR-1000) | | | | | | | PANEL NORMAL (PR-1000) |

*1: Video light model (CCD- TRV107/TRV308/TRV408/TRV608)

### 7. Record of Use check

**Note:** When replacing the drum assembly, initialize the data of address: A2 to A4.
When replacing the video light, initialize the data of address: E0 to E2.

| Page 2 | Address A2 to AA and E0 to E2 |
|---|---|

| Bit | Function | | Remarks |
|---|---|---|---|
| A2 | Drum rotation | Hour (H) | 1000th place digit and 100th place digit of counted time (decimal digit) |
| A3 | counted time | Hour (L) | 10th place digit and 1st place digit of counted time (decimal digit) |
| A4 | (BCD code) | Minute | |
| A5 | User initial power | Year | After setting the clock, set the date of power on next |
| A6 | on date | Month | |
| A7 | (BCD code) | Day | |
| A8 | Final condensation | Year | |
| A9 | occurrence date | Month | |
| AA | (BCD code) | Day | |
| E0 | Video light | Hour (H) | 1000th place digit and 100th place digit of counted time (decimal digit) |
| E1 | counted time | Hour (L) | 10th place digit and 1st place digit of counted time (decimal digit) |
| E2 | (BCD code) | Minute | |

**Using method:**

1) The record of use data is displayed at page: 2, addresses: A2 to AA and E0 to E2.
**Note:** This data will be erased (reset) when the cabinet (R) assembly (VC-272 board CN709 (24P)) is removed.

**Initializing method:**

1) Using the adjustment remote commander, select the object address and set data: 00.

### 8. Record of Self-diagnosis check

| Page 2 | Address B0 to C6 |
|---|---|

| Address | Self-diagnosis code |
|---|---|
| B0 | “Repaired by” code (Occurred 1st time) *1 |
| B1 | “Block function” code (Occurred 1st time) |
| B2 | “Detailed” code (Occurred 1st time) |
| B4 | “Repaired by” code (Occurred 2nd time) *1 |
| B5 | “Block function” code (Occurred 2nd time) |
| B6 | “Detailed” code (Occurred 2nd time) |
| B8 | “Repaired by” code (Occurred 3rd time) *1 |
| B9 | “Block function” code (Occurred 3rd time) |
| BA | “Detailed” code (Occurred 3rd time) |
| BC | “Repaired by” code (Occurred 4th time) *1 |
| BD | “Block function” code (Occurred 4th time) |
| BE | “Detailed” code (Occurred 4th time) |
| C0 | “Repaired by” code (Occurred 5th time) *1 |
| C1 | “Block function” code (Occurred 5th time) |
| C2 | “Detailed” code (Occurred 5th time) |
| C4 | “Repaired by” code (Occurred the last time) *1 |
| C5 | “Block function” code (Occurred the last time) |
| C6 | “Detailed” code (Occurred the last time) |

*1 : “01”→“C”, “03”→“E”

**Using method:**

1) The past self-diagnosis codes are displayed at page: 2, addresses: BC to C6. Refer to “SELF-DIAGNOSIS FUNCTION” for detail of the self-diagnosis code.
   **Note:** This data will be erased (reset) when the cabinet (R) assembly (VC-272 board CN709 (24P)) is removed.

# SECTION 6
# REPAIR PARTS LIST

## 6-1. EXPLODED VIEWS

NOTE:
- -XX, -X mean standardized parts, so they may have some differences from the original one.
- Items marked "*" are not stocked since they are seldom required for routine service. Some delay should be anticipated when ordering these items.
- The mechanical parts with no reference number in the exploded views are not supplied.
- Abbreviation
  CND : Canadian model
  HK : Hong Kong model
  KR : Korea model
  JE : Tourist model
  AR : Argentina model
  BR : Brazilian model

The components identified by mark ⚠or dotted line with mark ⚠ are critical for safety. Replace only with part number specified.

Les composants identifiés par une marque ⚠ sont critiques pour la sécurité. Ne les remplacer que par une pièce portant le numéro spécifié.

### 6-1-1. OVERALL SECTION

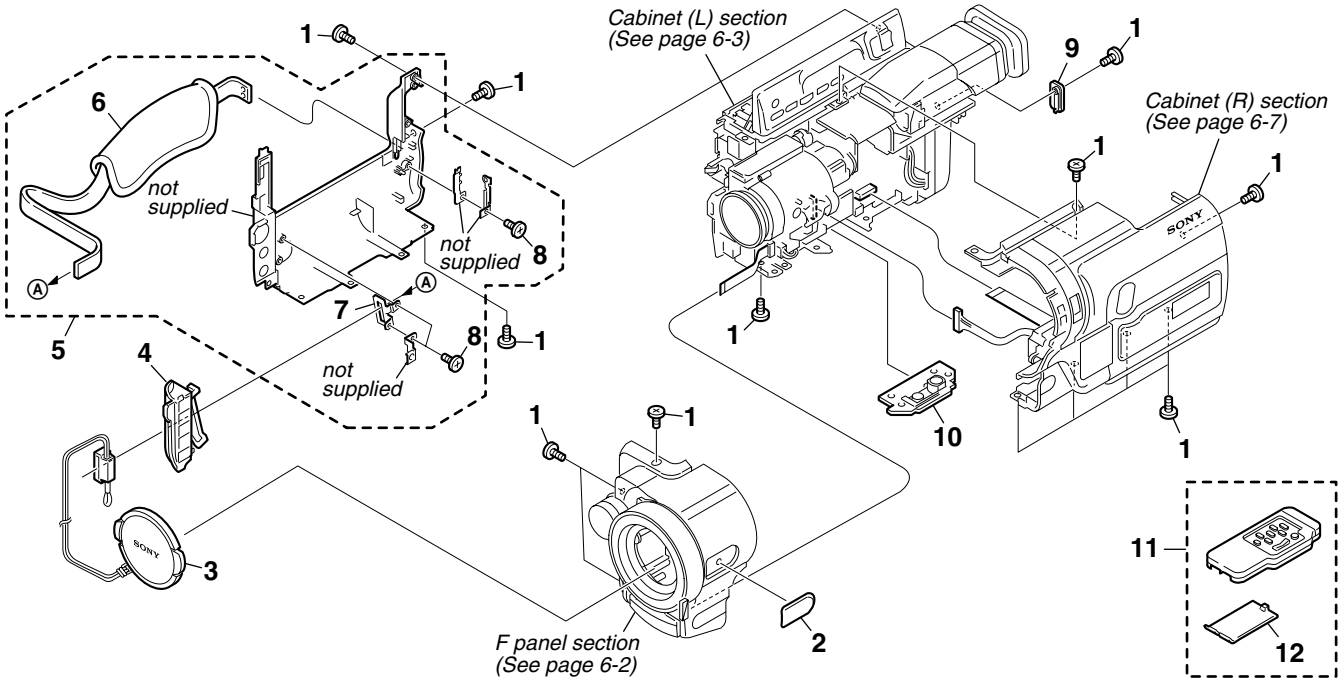


| Ref. No. | Part No. | Description | Remarks |
|---|---|---|---|
| 1 | 3-067-347-01 | MI SCREW M2 (H) | |
| 2 | 3-072-155-01 | PLATE (20), MAGNIFICATION (TRV408/TRV608) | |
| 2 | 3-072-155-11 | PLATE (20), MAGNIFICATION (TRV108/TRV308) | |
| 2 | 3-072-155-21 | PLATE (20), MAGNIFICATION (TRV107) | |
| 3 | X-3949-376-1 | CAP (N) ASSY, LENS | |
| 4 | 3-072-149-01 | COVER (20), JACK (TRV107/TRV108:US,CND,E,BR/TRV308/TRV408/TRV608:US,CND,E) | |
| 4 | 3-072-149-11 | COVER(20), JACK (TRV108:AR/TRV608:AR) | |
| 5 | X-3952-094-1 | CABINET (L) (20) ASSY | |
| 6 | 3-052-815-01 | BELT (ES), GRIP | |
| 7 | 3-072-151-01 | STOPPER (FRONT) (20), BELT | |
| 8 | 3-948-339-61 | TAPPING | |
| 9 | 3-072-148-01 | LID (20), CPC | |
| 10 | 3-987-717-01 | SCREW | |
| 11 | 1-467-574-21 | REMOTE COMMANDER (RMT-708) | (TRV107/TRV408) |
| 12 | 3-958-131-01 | LID, BATTERY CASE (FOR RMT-708) | (TRV107/TRV408) |

### 6-1-2. F PANEL SECTION

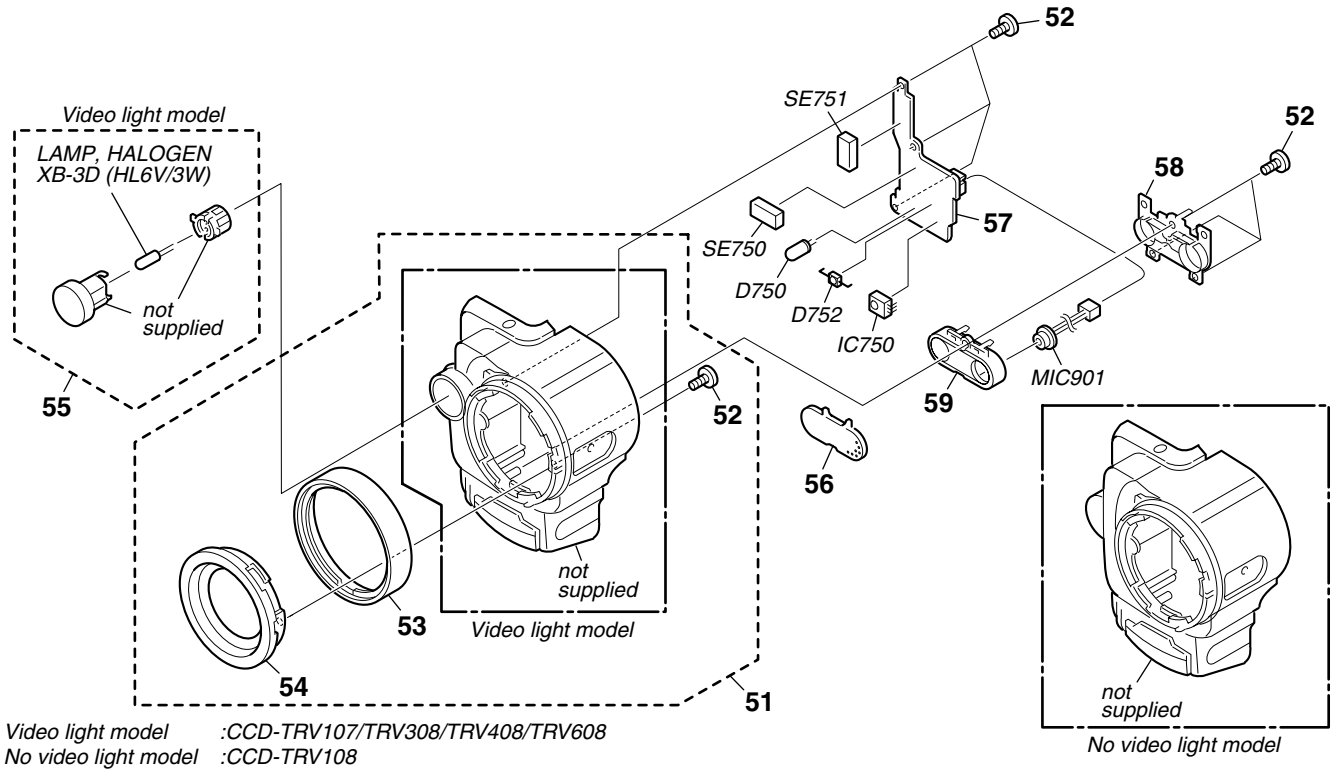


| Ref. No. | Part No. | Description | Remarks |
|---|---|---|---|
| 51 | X-3952-081-1 | PANEL (20) ASSY, F (TRV107/TRV408) | |
| 51 | X-3952-085-1 | PANEL (20) ASSY, F (TRV308/TRV608) | |
| 51 | X-3952-121-1 | PANEL (20) ASSY, F (TRV108) | |
| 52 | 3-948-339-61 | TAPPING | |
| 53 | 3-065-461-01 | RING (10), ORNAMENTAL | |
| 54 | 3-072-175-01 | SCREW (20), FILTER | |
| 55 | 1-518-787-21 | LIGHT, VIDEO (TRV107/TRV308/TRV408/TRV608) | |
| 56 | 3-072-181-01 | CUSHION (20), MICROPHONE | |
| 57 | A-7078-027-A | SI-033 BOARD, COMPLETE | |
| 58 | 3-072-180-01 | RETAINER (REAR)(20),MICROPHONE | |
| 59 | 3-072-179-01 | RETAINER(FRONT)(20),MICROPHONE | |
| D750 | 8-719-060-65 | DIODE DAC3825 | |
| D752 | 8-719-078-33 | DIODE BR2222S-71-B2 | |
| IC750 | 6-701-681-01 | IC RPM7140-V4 (TRV107/TRV408) | |
| MIC901 | 1-542-312-11 | MICROPHONE | |
| SE750 | 1-803-042-31 | SENSOR, ANGULAR VELOCITY (PITCH) (SERVICE)(TRV308/TRV408/TRV608) | |
| SE751 | 1-803-042-41 | SENSOR, ANGULAR VELOCITY (YAW) (SERVICE)(TRV308/TRV408/TRV608) | |

### 6-1-3. CABINET (L) SECTION

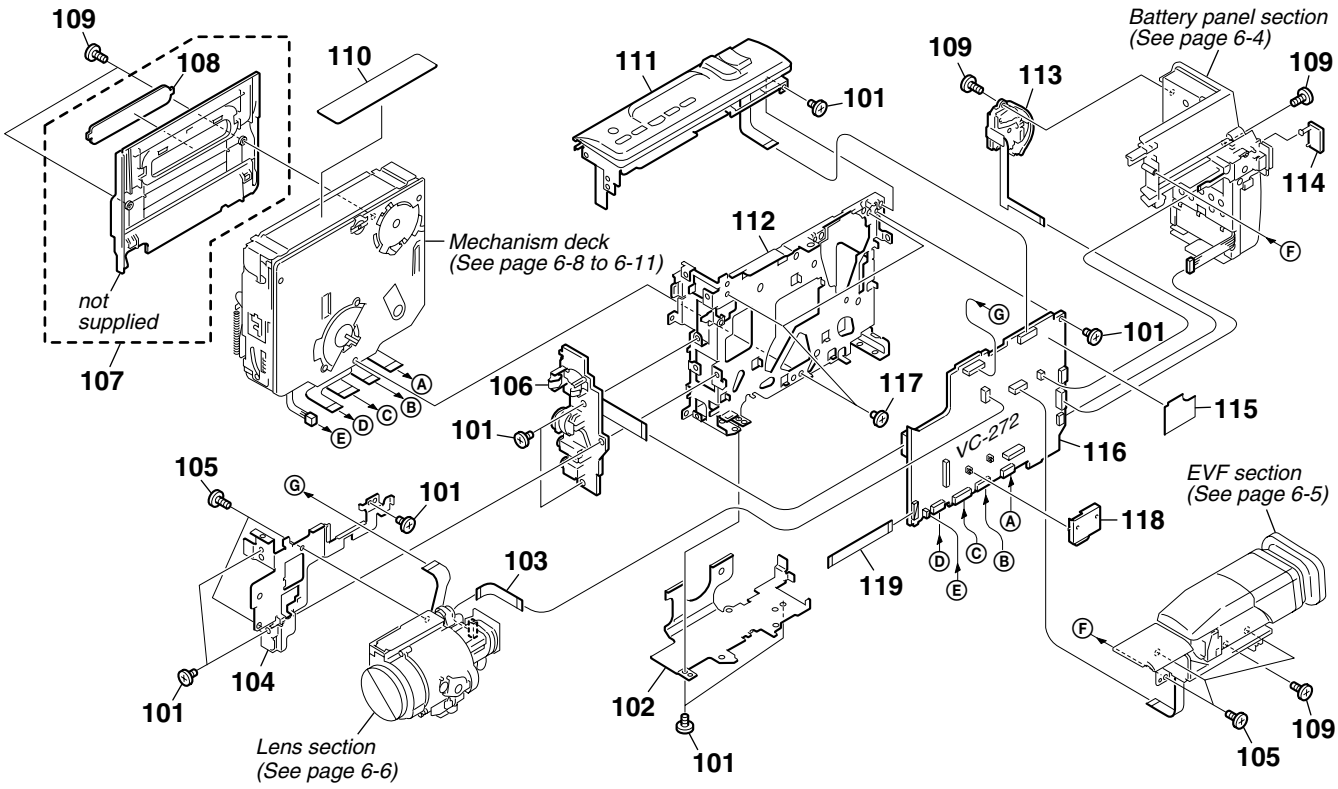


| Ref. No. | Part No. | Description | Remarks |
|---|---|---|---|
| 101 | 3-968-729-51 | SCREW (M2), LOCK ACE, P2 | |
| 102 | 3-072-145-01 | FRAME (B) (20), MD | |
| 103 | 1-683-163-11 | FP-400 FLEXIBLE BOARD | |
| 104 | 3-072-146-01 | FRAME (20), LENS | |
| 105 | 3-948-339-61 | TAPPING | |
| 106 | 1-683-160-21 | FP-397 FLEXIBLE BOARD (TRV107/TRV308/TRV408/TRV608) | |
| 106 | 1-683-160-41 | FP-397 FLEXIBLE BOARD (TRV108) | |
| 107 | X-3952-109-1 | LID (20) ASSY, CASSETTE | |
| 108 | 3-072-209-01 | WINDOW (20), CASSETTE | |
| 109 | 3-067-347-01 | MI SCREW M2 (H) | |
| 110 | 3-066-169-01 | SHEET, MD | |
| 111 | 1-476-976-11 | SWITCH BLOCK, CONTROL (FK-2000) (TRV107/TRV308/TRV408/TRV608) | |
| 111 | 1-476-976-21 | SWITCH BLOCK, CONTROL (FK-2000)(TRV108) | |

| Ref. No. | Part No. | Description | Remarks |
|---|---|---|---|
| 112 | 3-072-144-01 | FRAME (A) (20), MD | |
| 113 | 1-476-978-11 | SWITCH BLOCK, CONTROL (SS-2000) | |
| 114 | 3-072-206-01 | LID (20), USB (TRV608) | |
| * 115 | 3-065-654-01 | SHIELD (10), DD | |
| 116 | A-7028-968-A | VC-272 (N-V) BOARD, COMPLETE (SERVICE) (TRV107) | |
| 116 | A-7028-970-A | VC-272 (N-VM) BOARD, COMPLETE (SERVICE) (TRV308/TRV408) | |
| 116 | A-7028-972-A | VC-272 (N-VMU) BOARD, COMPLETE (SERVICE)(TRV608) | |
| 116 | A-7028-973-A | VC-272 (N-VW) BOARD, COMPLETE (SERVICE) (TRV108) | |
| 117 | 4-974-725-01 | SCREW (M1.7X2.5), P | |
| 118 | 3-072-147-01 | CASE (20), SHIELD, RP | |
| 119 | 1-683-595-11 | FP-418 FLEXIBLE BOARD | |

## 6-1-4. BATTERY PANEL SECTION

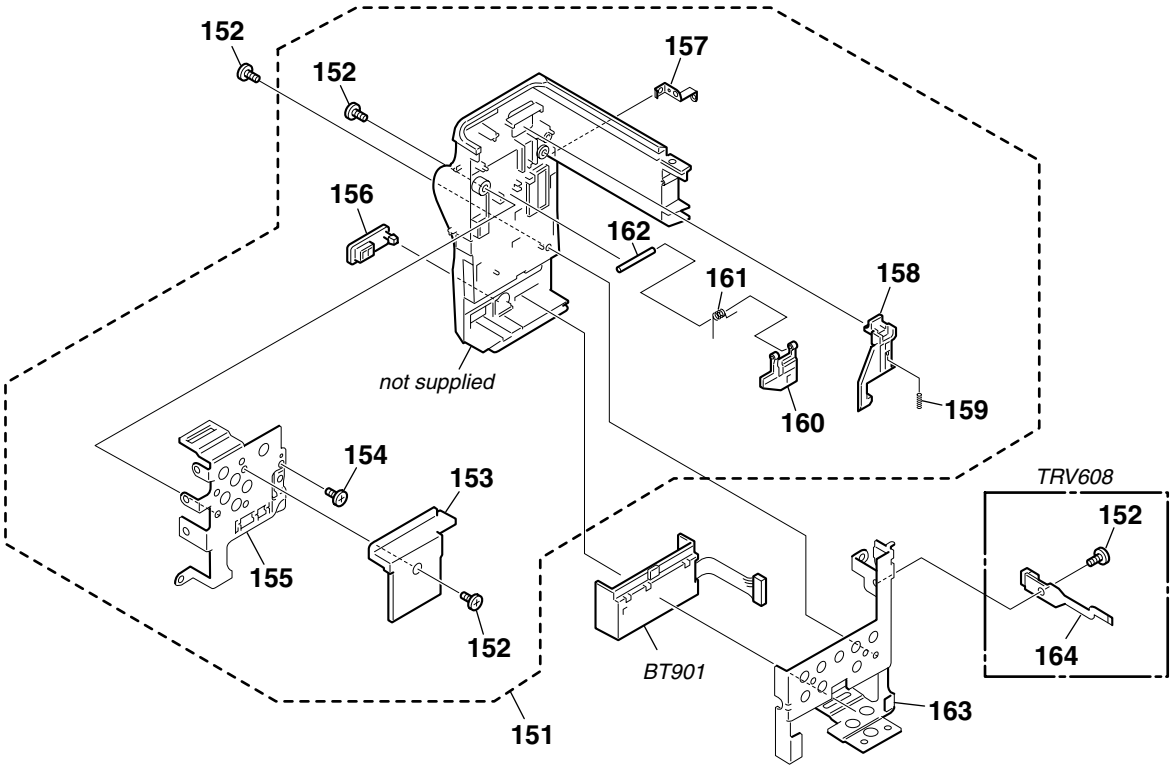


| Ref. No. | Part No. | Description | Remarks |
|---|---|---|---|
| 151 | X-3952-098-1 | PANEL (20) ASSY, BATTERY (TRV608) | |
| 151 | X-3952-099-1 | PANEL (20) ASSY, BATTERY (TRV107/TRV108:US,CND,E,AR/TRV308/TRV408) | |
| 151 | X-3952-251-1 | PANEL (20) ASSY, BATTERY (TRV108:BR) | |
| 152 | 3-067-347-01 | MI SCREW M2 (H) | |
| 153 | 3-072-200-01 | BLIND (20), BATTERY | |
| 154 | 3-948-339-61 | TAPPING | |
| 155 | 3-072-201-01 | SHEET METAL (20)(UPPER), STRAP | |
| 156 | 3-072-205-01 | LID (20), JACK | |
| 157 | 3-072-202-01 | PLATE (20), GROUND, VF | |
| 158 | 3-072-203-01 | KNOB (20), BATTERY RELEASE | |
| 159 | 3-968-771-01 | SPRING, COMPRESSION | |
| 160 | 3-072-204-01 | LOCK (20), BATTERY | |
| 161 | 3-968-768-01 | SPRING, LOCK | |
| 162 | 3-968-770-01 | SHAFT, BT | |
| 163 | 3-072-207-01 | SHEET METAL (20)(LOWER), STRAP | |
| 164 | 1-683-162-21 | FP-399 FLEXIBLE BOARD (TRV608) | |
| BT901 | 1-694-772-11 | TERMINAL BOARD, BATTERY | |

### 6-1-5. EVF SECTION

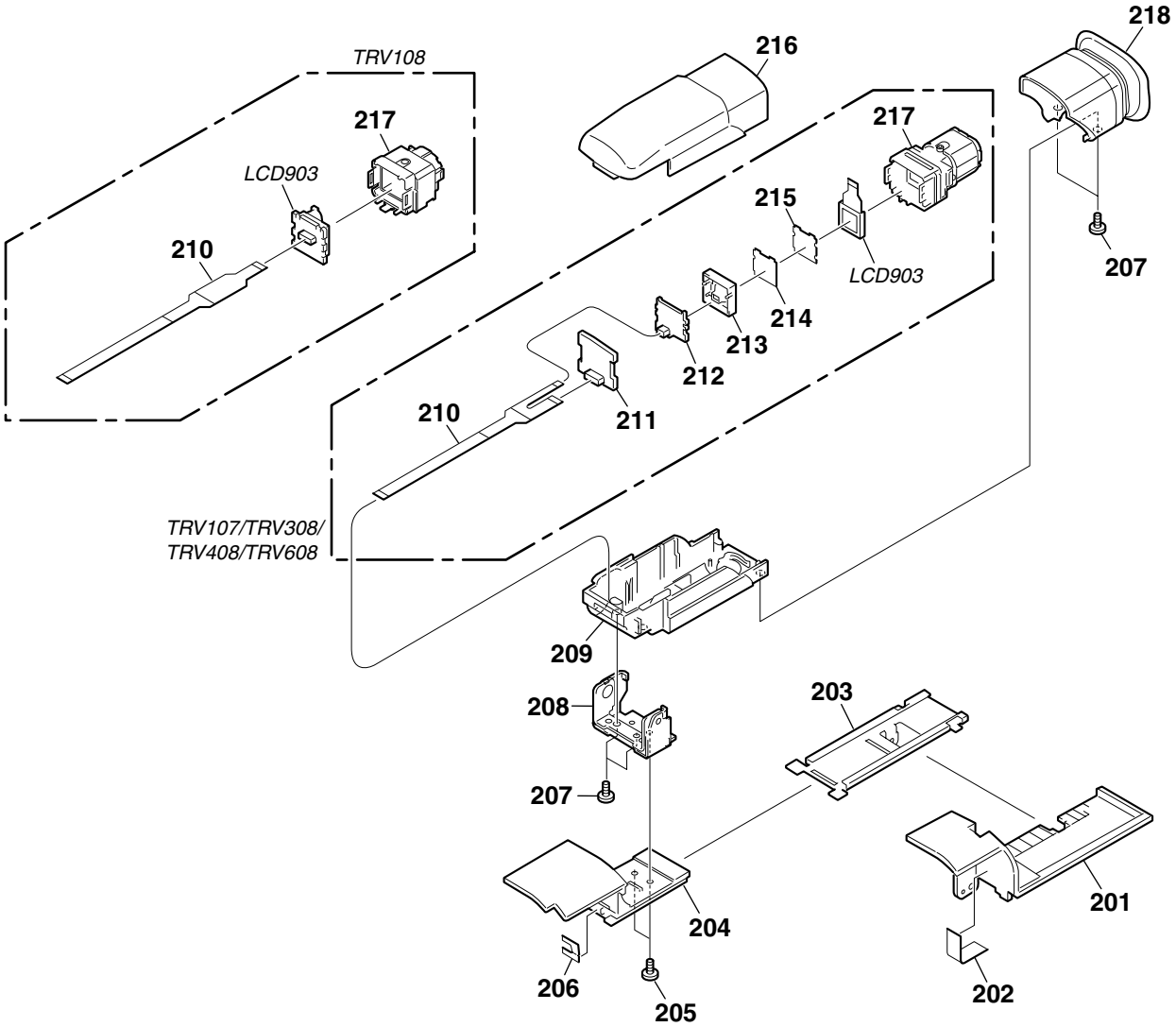


| Ref. No. | Part No. | Description | Remarks |
|---|---|---|---|
| 201 | 3-072-196-01 | BASE (20), VF | |
| 202 | 3-941-343-21 | TAPE (A) | |
| 203 | 3-072-185-01 | PLATE (20), FIXED, SLIDE | |
| 204 | X-3952-111-1 | BASE (20) ASSY, SLIDE | |
| 205 | 3-067-347-01 | MI SCREW M2 (H) | |
| * 206 | 3-058-640-01 | RETAINER (100), HARNESS | |
| 207 | 3-948-339-81 | TAPPING | |
| 208 | X-3952-112-1 | HINGE (20) ASSY, VF | |
| 209 | X-3952-104-1 | CABINET (LOWER) (20) ASSY, EVF | (TRV107/TRV308/TRV408/TRV608) |
| 209 | X-3952-105-1 | CABINET (LOWER)(M)(20)ASSY,EVF (TRV108) | |
| 210 | 1-683-164-11 | FP-401 FLEXIBLE BOARD | (TRV107/TRV308/TRV408/TRV608) |
| 210 | 1-683-165-11 | FP-402 FLEXIBLE BOARD (TRV108) | |
| 211 | A-7078-025-A | VF-150 (BW) BOARD, COMPLETE | (TRV107/TRV308/TRV408/TRV608) |
| 212 | A-7078-026-A | LB-073 (BW) BOARD, COMPLETE | (TRV107/TRV308/TRV408/TRV608) |
| 213 | 3-072-214-01 | GUIDE (20), LAMP | (TRV107/TRV308/TRV408/TRV608) |
| 214 | 3-072-211-01 | ILLUMINATOR | (TRV107/TRV308/TRV408/TRV608) |
| 215 | 3-072-210-01 | SHEET, PRISM | (TRV107/TRV308/TRV408/TRV608) |
| 216 | 3-072-194-01 | CABINET (UPPER) (20), EVF | |
| 217 | X-3951-166-1 | LENS (M) ASSY, VF (TRV108) | |
| 217 | X-3951-168-1 | LENS (B) ASSY, VF | (TRV107/TRV308/TRV408/TRV608) |
| 218 | X-3952-107-1 | CABINET (REAR) (20) ASSY, EVF | |
| LCD903 | 1-804-259-21 | INDICATOR MODULE, LIQUID CRYSTAL | (TRV108) |
| LCD903 | 8-753-028-49 | LCX032AP-J | (TRV107/TRV308/TRV408/TRV608) |

### 6-1-6. LENS SECTION

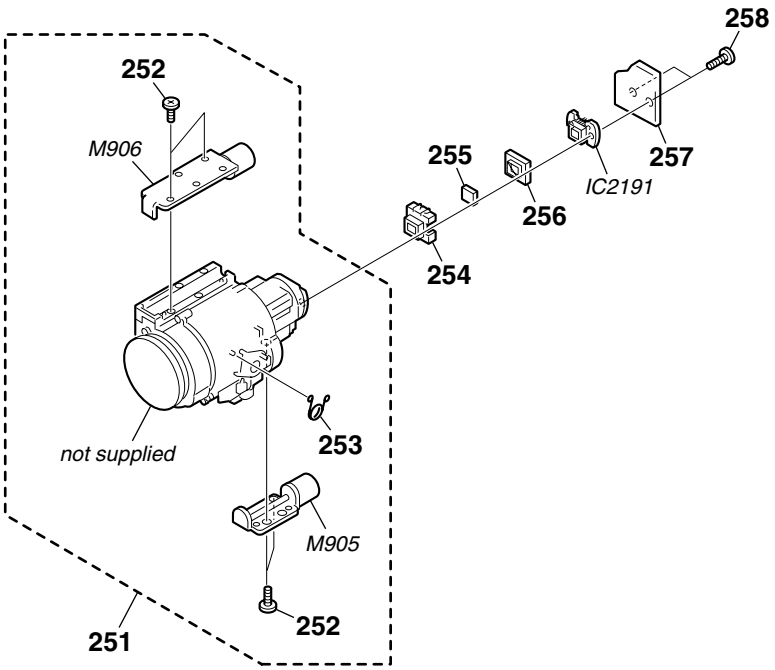


Be sure to read “Precautions upon replacing CCD imager” on page 4-8 when changing the CCD imager.

| Ref. No. | Part No. | Description | Remarks |
|---|---|---|---|
| 251 | 8-848-755-01 | DEVICE, LENS LSV-631B | |
| 252 | 3-713-791-41 | SCREW (M1.7X5), TAPPING, P2 | |
| 253 | 3-053-800-01 | SPRING, RETURN | |
| 254 | 3-978-981-11 | ADAPTOR (FK), CCD FITTING | |
| 255 | 1-758-084-21 | FILTER BLOCK, OPTICAL (TRV107/TRV108) | |
| 255 | 1-758-133-21 | FILTER BLOCK, OPTICAL (TRV308/TRV408/TRV608) | |
| 256 | 3-953-817-01 | RUBBER (F), SEAL (TRV308/TRV408/TRV608) | |
| 256 | 3-968-054-11 | RUBBER (FM), SHIELD (TRV107/TRV108) | |
| 257 | A-7078-035-A | CD-354 BOARD, COMPLETE | |
| 258 | 3-318-203-11 | SCREW (B1.7X6), TAPPING | |
| IC2191 | A-7012-091-A | CCD BLOCK ASSY (CCD IMAGER) | (TRV107/TRV108) |
| IC2191 | A-7031-207-A | CCD BLOCK ASSY (CCD IMAGER) | (TRV608) |
| IC2191 | A-7031-301-A | CCD BLOCK ASSY (CCD IMAGER) | (TRV308/TRV408) |
| M905 | 1-763-796-11 | MOTOR, STEPPING F631B (FOCUS) | |
| M906 | 1-763-046-21 | MOTOR, STEPPING Z600 (ZOOM) | |

## 6-1-7. CABINET (R) SECTION

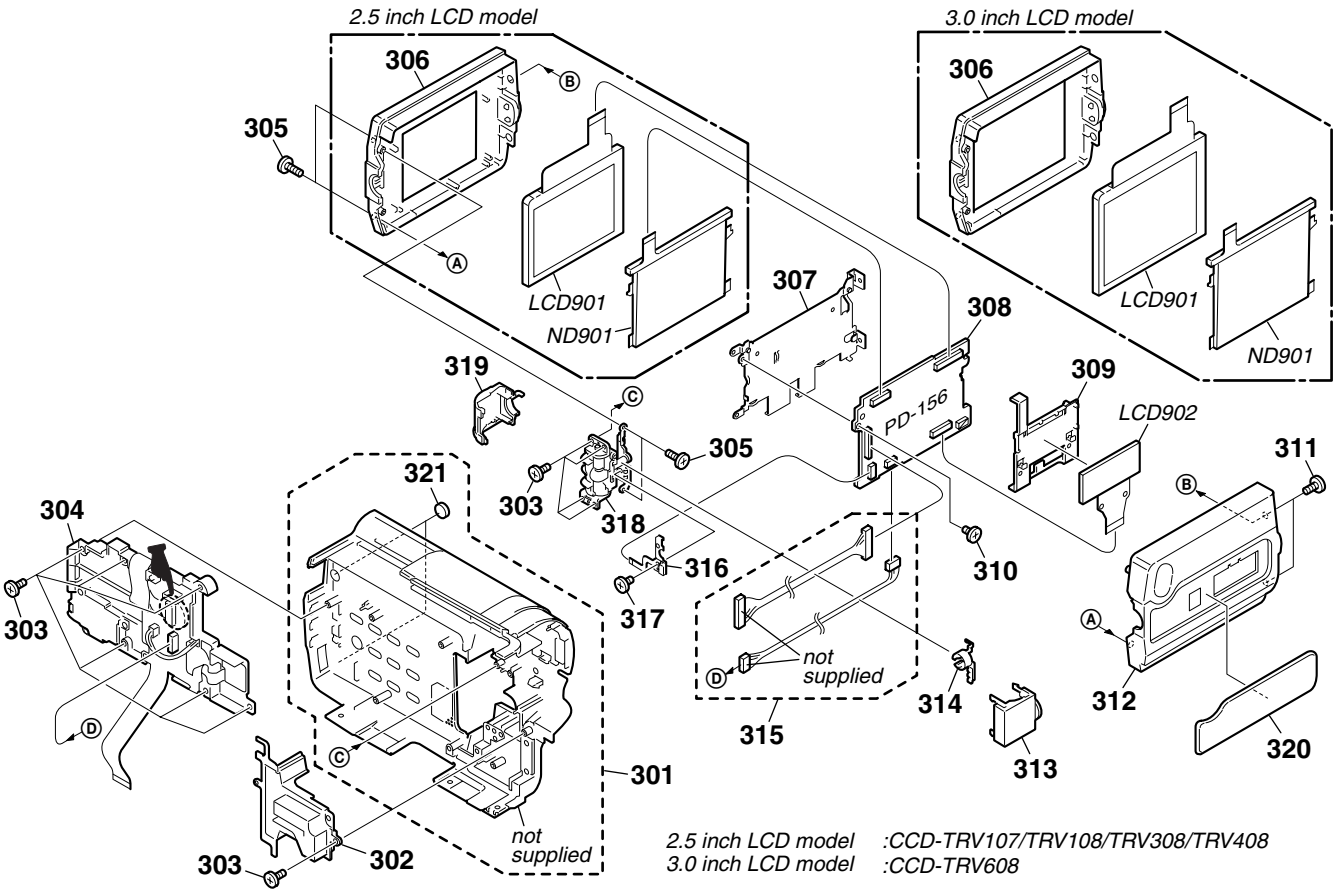


: The printed wiring board of the Control switch block (CF-2000) on which BT001 (lithium battery) is mounted, is not shown.

**CAUTION :**
Danger of explosion if battery is incorrectly replaced.
Replace only with the same or equivalent type.

| Ref. No. | Part No. | Description | Remarks |
|---|---|---|---|
| 301 | X-3952-090-1 | CABINET (R) (21) ASSY | |
| 302 | 3-072-154-01 | BLIND (20), HINGE | |
| 303 | 3-948-339-61 | TAPPING | |
| 304 | 1-476-977-11 | SWITCH BLOCK, CONTROL (CF-2000) | |
| 305 | 3-948-339-31 | SCREW, TAPPING | |
| 306 | X-3952-101-1 | CABINET (M) (21) ASSY, P (TRV107/TRV108/TRV308/TRV408) | |
| 306 | X-3952-102-1 | CABINET (M) (21) ASSY, P (TRV608) | |
| 307 | 3-072-186-01 | PANEL FRAME (21) (TRV107/TRV108/TRV308/TRV408) | |
| 307 | 3-072-186-11 | PANEL FRAME (21) (TRV608) | |
| 308 | A-7078-036-A | PD-156 (S3) BOARD, COMPLETE (TRV608) | |
| 308 | A-7078-040-A | PD-156 (S-2.5) BOARD, COMPLETE (TRV107/TRV108/TRV308/TRV408) | |
| 309 | 3-072-187-01 | HOLDER (21), LCD | |
| 310 | 3-968-729-51 | SCREW (M2), LOCK ACE, P2 | |
| 311 | 3-067-347-01 | MI SCREW M2 (H) | |
| 312 | 3-072-184-01 | CABINET (C) (21), P | |
| 313 | 3-072-188-01 | COVER (C) (21), HINGE | |
| * 314 | 3-058-672-01 | CLAMP, HARNESS | |

| Ref. No. | Part No. | Description | Remarks |
|---|---|---|---|
| 315 | 1-961-433-21 | HARNESS (PD-115) | |
| 316 | 1-418-802-11 | SWITCH BLOCK, CONTROL (PR-10000) | |
| 317 | 4-974-725-01 | SCREW (M1.7X2.5), P | |
| 318 | X-3951-206-1 | HINGE (12) ASSY | |
| 319 | 3-072-189-01 | COVER (M) (21), HINGE | |
| 320 | 3-072-152-01 | WINDOW (21), LCD (TRV608) | |
| 320 | 3-072-152-21 | WINDOW (21), LCD (TRV408) | |
| 320 | 3-072-152-31 | WINDOW (21), LCD (TRV308) | |
| 320 | 3-072-152-61 | WINDOW (21), LCD (TRV107) | |
| 320 | 3-072-152-81 | WINDOW (21), LCD (TRV108) | |
| 321 | 3-959-978-02 | CUSHION, PANEL | |
| LCD901 | 1-803-852-31 | INDICATOR MODULE, LIQUID CRYSTAL (TRV107/TRV108/TRV308/TRV408) | |
| LCD901 | 1-803-854-21 | INDICATOR MODULE, LIQUID CRYSTAL (TRV608) | |
| LCD902 | A-7028-734-A | INDICATION LCD BLOCK ASSY (H) | |
| ⚠ ND901 | 1-517-856-31 | TUBE, FLUORESCENT,COLD CATHODE (TRV608) | |
| ⚠ ND901 | 1-518-796-11 | TUBE, FLUORESCENT,COLD CATHODE (TRV107/TRV108/TRV308/TRV408) | |

**Note :**
The components identified by mark ⚠ or dotted line with mark ⚠ are critical for safety.
Replace only with part number specified.

**Note :**
Les composants identifiés par une marque ⚠ sont critiques pour la sécurité.
Ne les remplacer que par une pièce portant le numéro spécifié.

### 6-1-8. CASSETTE COMPARTMENT ASSY, DRUM ASSY

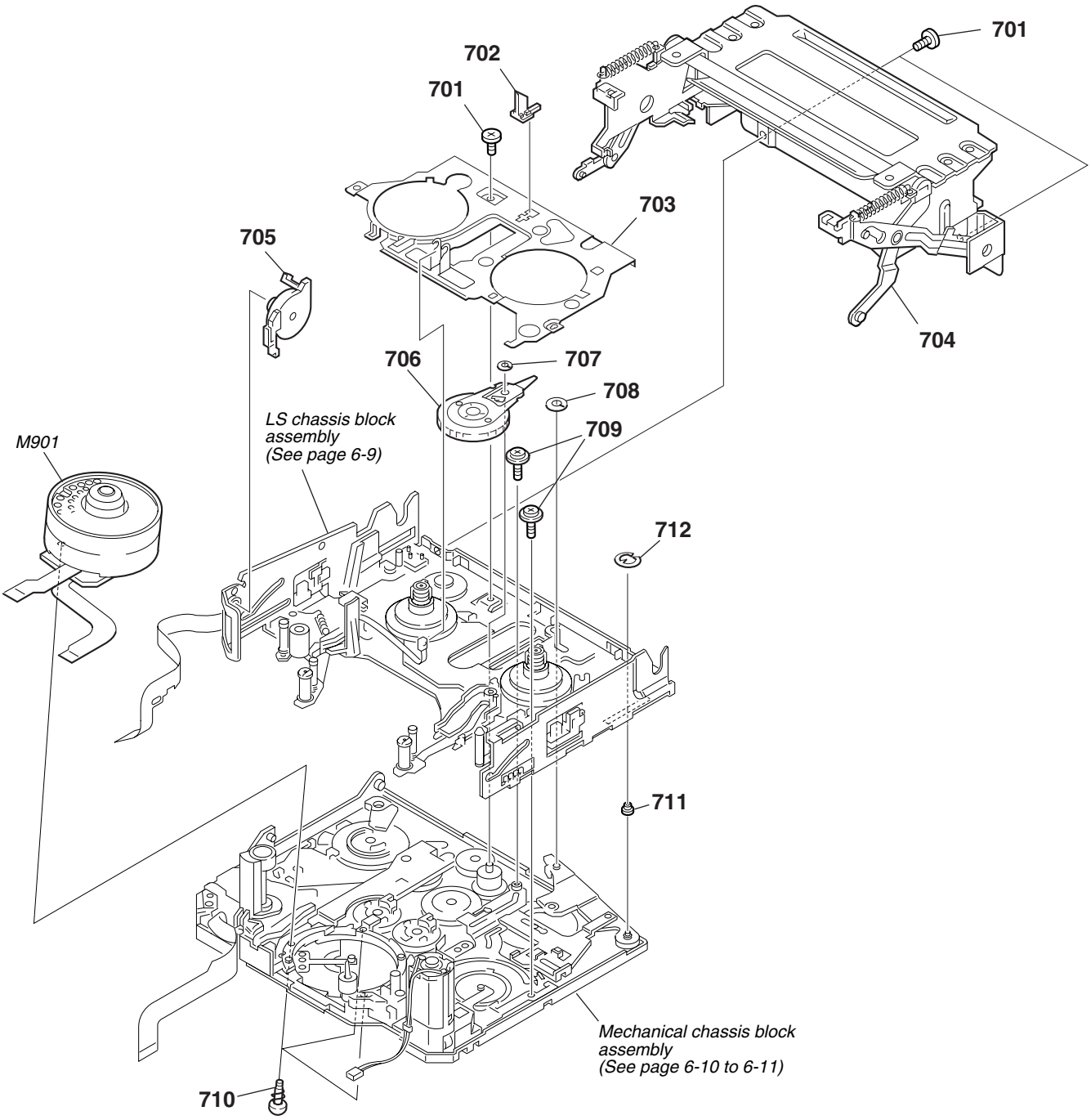


| Ref. No. | Part No. | Description | Remarks |
|---|---|---|---|
| 701 | 3-065-932-01 | PAN (2 MAIN M1.4X1.6), CAMERA | |
| 702 | 3-065-895-01 | LEVER, REEL RELEASE | |
| 703 | 3-065-896-01 | PLATE, BLIND | |
| 704 | X-3951-298-1 | CASSETTE COMPARTMENT ASSY | |
| 705 | X-3951-302-1 | DAMPER ASSY | |
| 706 | X-3951-297-1 | GEAR ASSY, R DRIVE | |
| 707 | 3-065-840-01 | CUT (0.98X3X0.13), LUMILER (W) | |
| 708 | 3-065-935-01 | HLC CUT 1.8X4X0.5 | |
| 709 | 3-947-503-01 | SCREW (M1.4) | |
| 710 | X-3951-299-1 | SCREW ASSY, DRUM FITTING | |
| 711 | 3-074-309-01 | ROLLER A, LS GUIDE | |
| 712 | 7-624-101-04 | STOP RING 1.2 (E TYPE) | |
| M901 | A-7048-965-A | DRUM (DGH-0F3A-R) (SERVICE) | |

### 6-1-9. LS CHASSIS BLOCK ASSEMBLY

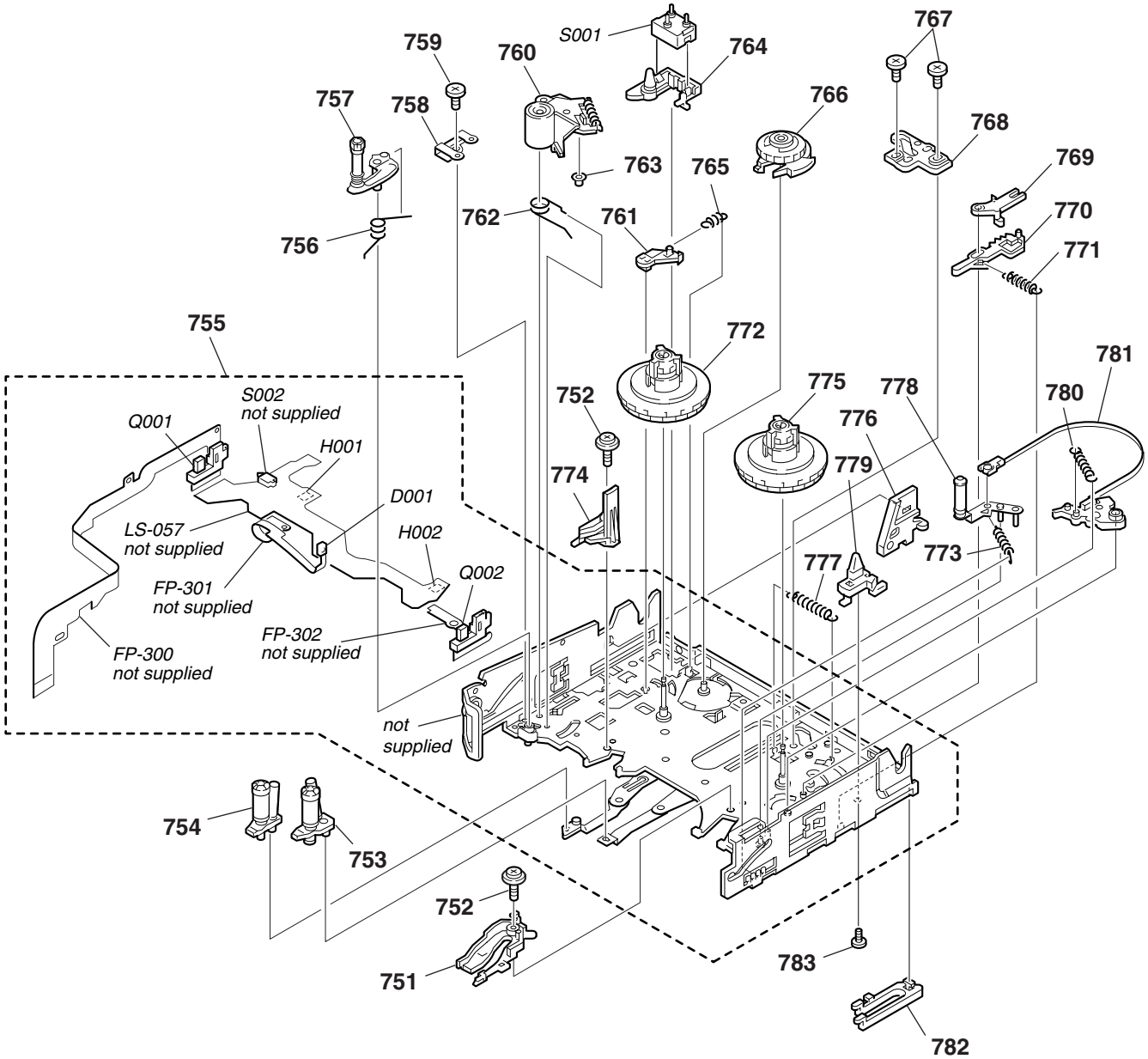


| Ref. No. | Part No. | Description | Remarks |
|---|---|---|---|
| 751 | 3-065-822-01 | RAIL (S), GUIDE | |
| 752 | 3-947-503-01 | SCREW (M1.4) | |
| 753 | A-7096-416-A | BASE (S) BLOCK ASSY, GUIDE | |
| 754 | A-7096-415-A | BASE (T) BLOCK ASSY, GUIDE | |
| 755 | A-7096-426-A | CHASSIS ASSY, LS | |
| 756 | 3-065-802-01 | SPRING, TG7 ARM | |
| 757 | A-7096-414-A | ARM BLOCK ASSY, TG7 | |
| 758 | 3-065-801-01 | RETAINER, TG7 | |
| 759 | 3-065-932-01 | PAN (2 MAIN M1.4X1.6), CAMERA | |
| 760 | X-3951-303-1 | ARM ASSY, PINCH | |
| 761 | 3-065-823-01 | ARM, T RATCHET | |
| 762 | 3-065-794-01 | ROAD (SPR), PINCH ARM | |
| 763 | 3-065-792-01 | ROLLER, P LIM ARM | |
| 764 | 3-065-834-01 | GUIDE (T), CASSETTE | |
| 765 | 3-065-824-01 | SPRING, T RATCHET | |
| 766 | A-7096-417-A | SOFT ASSY, T | |
| 767 | 7-627-852-38 | SCREW,PRECISION +P1.7X1.8TYPE3 | |
| 768 | 3-065-832-01 | PLATE, LS CAM | |
| 769 | 3-065-828-01 | ARM, S RATCHET | |
| 770 | 3-065-829-01 | PLATE, S RATCHET (RE) | |

| Ref. No. | Part No. | Description | Remarks |
|---|---|---|---|
| 771 | 3-065-830-01 | SPRING, S RATCHET | |
| 772 | X-3951-288-1 | TABLE (T) ASSY, REEL | |
| 773 | 3-065-819-01 | SPRING, TG1 ARM | |
| 774 | 3-065-821-01 | RAIL (T), GUIDE | |
| 775 | X-3951-289-1 | TABLE (S) ASSY, REEL | |
| 776 | 3-065-833-01 | GUIDE, LOCK | |
| 777 | 3-065-831-01 | PLATE (SPR), RE RETURN | |
| 778 | X-3951-304-1 | ARM ASSY, TG1 | |
| 779 | 3-065-835-01 | GUIDE (S), CASSETTE | |
| 780 | 3-065-820-01 | SPRING, RVS ARM | |
| 781 | X-3951-296-1 | BAND (ASSY), BT | |
| 782 | 3-065-836-01 | COVER, LS GREASE | |
| 783 | 3-067-167-01 | SCREW (M1.4X2), CAMERA TAPPING | |
| D001 | 8-719-988-42 | DIODE GL453 (TAPE LED) | |
| H001 | 8-719-033-37 | ELEMENT, HALL HW-105C (T REEL) | |
| H002 | 8-719-033-37 | ELEMENT, HALL HW-105C (S REEL) | |
| Q001 | 8-729-907-25 | PHOTO TRANSISTOR PT4850F (TAPE TOP) | |
| Q002 | 8-729-907-25 | PHOTO TRANSISTOR PT4850F (TAPE END) | |
| S001 | 1-692-614-11 | SWITCH, PUSH (3 KEY) (REC PROOF) | |

### 6-1-10. MECHANICAL CHASSIS BLOCK ASSEMBLY-1

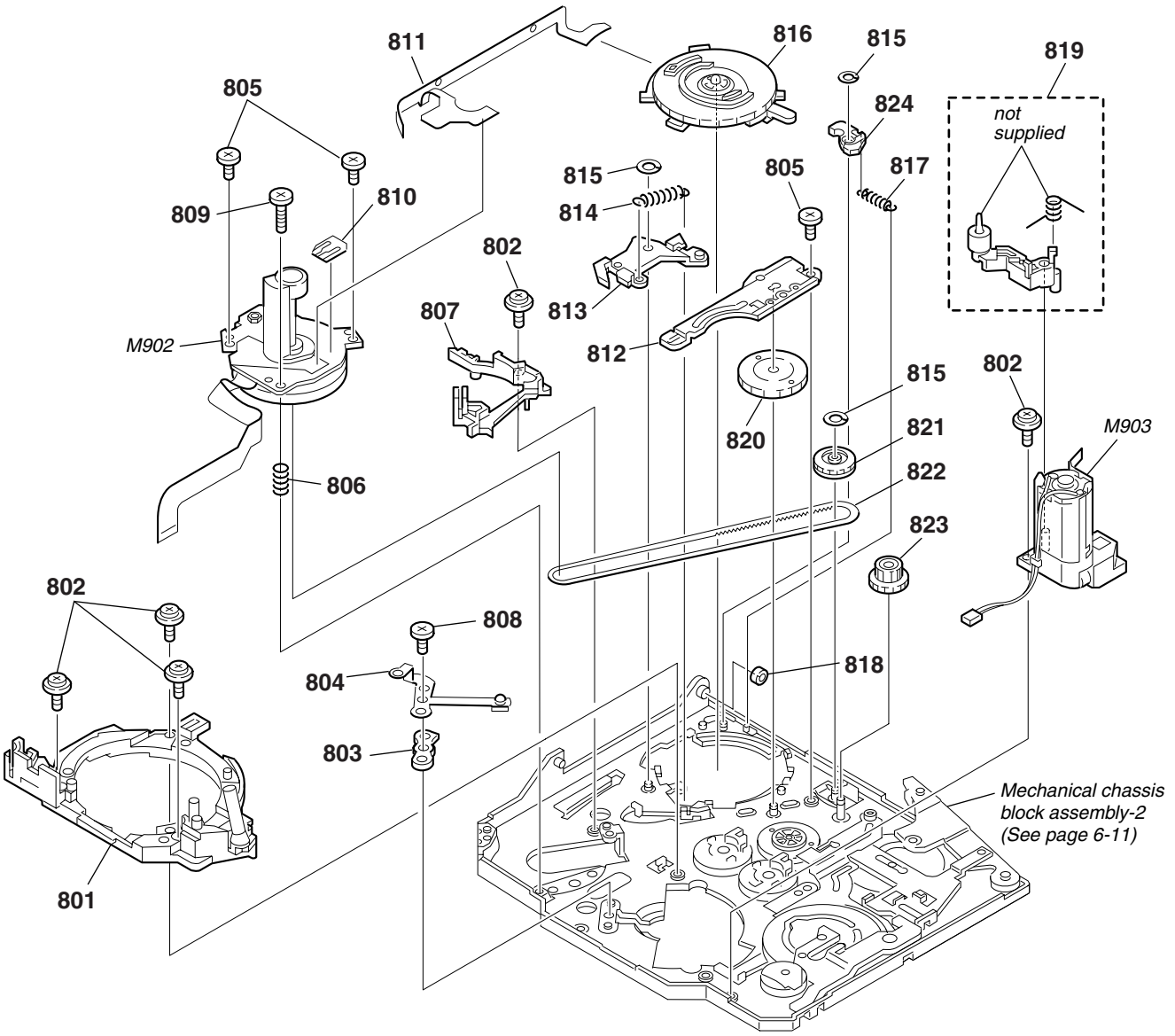


| Ref. No. | Part No. | Description | Remarks |
|---|---|---|---|
| 801 | A-7096-422-A | BASE ASSY, DRUM | |
| 802 | 3-947-503-01 | SCREW (M1.4) | |
| 803 | 3-065-928-01 | SPACER, GROUND | |
| 804 | 3-065-927-01 | GROUND, DRUM | |
| 805 | 3-065-932-01 | PAN (2 MAIN M1.4X1.6), CAMERA | |
| 806 | 3-067-154-01 | SPRING, CAPSTAN | |
| 807 | 3-065-931-01 | RAIL (T2), GUIDE | |
| 808 | X-3947-398-1 | SCREW ASSY, M1.7 PW | |
| 809 | 3-065-933-01 | PAN (2 MAIN 1.4X4.5), CAMERA | |
| 810 | 1-677-049-11 | PWB, FP-228 FLEXIBLE | |
| 811 | 1-680-434-11 | PWB, FP-299 FLEXIBLE | |
| 812 | 3-065-877-01 | PLATE (T), GUIDE LOCK | |
| 813 | X-3951-301-1 | PLATE ASSY, PINCH PRESSURE | |

| Ref. No. | Part No. | Description | Remarks |
|---|---|---|---|
| 814 | 3-065-881-01 | SPRING, P PRESSURE PLATE | |
| 815 | 3-065-934-01 | HLW CUT 0.98X3X0.25 | |
| 816 | 1-786-096-11 | SWITCH, ROTARY | |
| 817 | 3-065-898-01 | SPRING, EJECT ARM | |
| 818 | 3-065-870-01 | ROLLER, LS GUIDE | |
| 819 | A-7096-421-A | ARM ASSY, HCL | |
| 820 | 3-065-918-01 | GEAR (2), CAM RELAY | |
| 821 | A-7096-419-A | GEAR ASSY, CHANGE | |
| 822 | 3-065-902-01 | BELT, TIMING | |
| 823 | 3-065-905-01 | GEAR, RELAY | |
| 824 | 3-065-882-01 | ARM, EJECT | |
| M902 | 8-835-701-01 | MOTOR, DC SCE13A/C-NP (CAPSTAN) | |
| M903 | A-7096-420-A | MOTOR ASSY, LD (LOADING) | |

### 6-1-11. MECHANICAL CHASSIS BLOCK ASSEMBLY-2

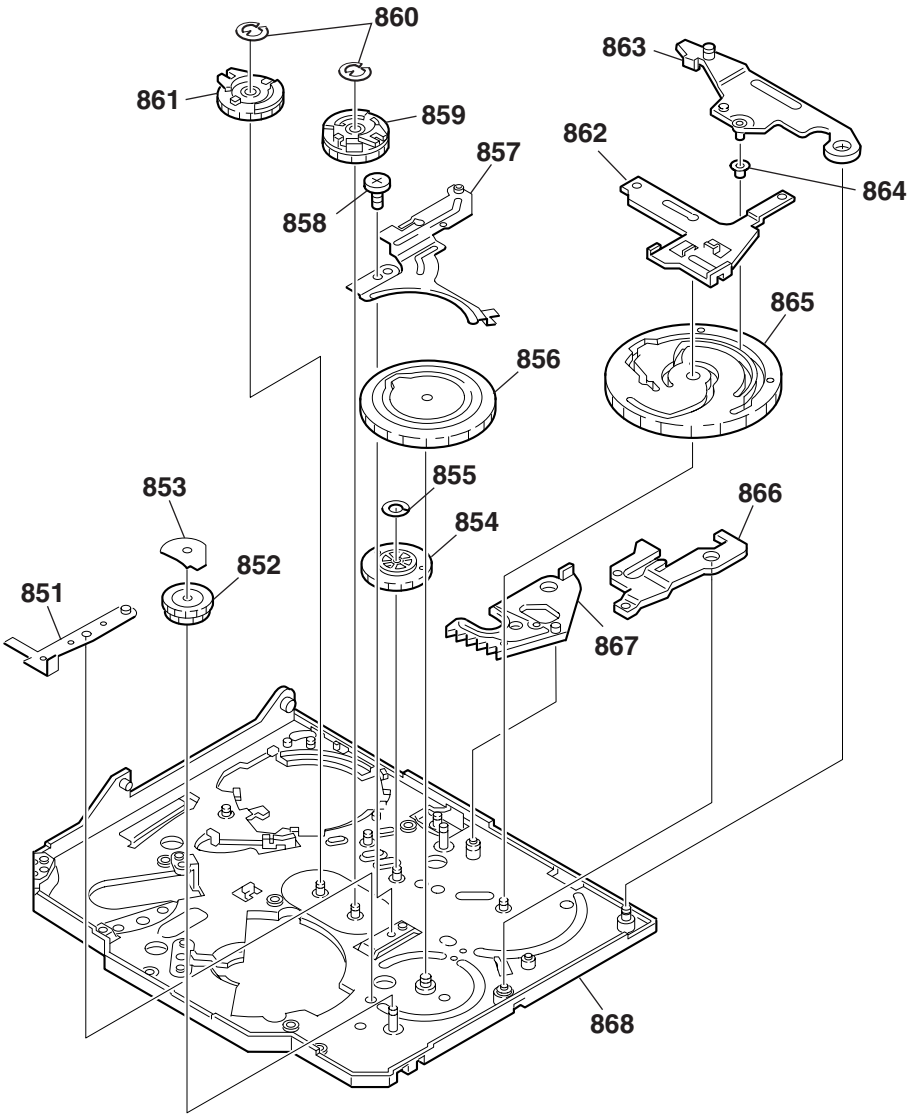


| Ref. No. | Part No. | Description | Remarks | Ref. No. | Part No. | Description | Remarks |
|---|---|---|---|---|---|---|---|
| 851 | 3-065-920-01 | ARM, HC DRIVE | | 860 | 7-624-101-04 | STOP RING 1.2 (E TYPE) | |
| 852 | 3-065-913-01 | GEAR (4), LD | | 861 | A-7096-412-A | GEAR (T) ASSY, GUIDE | |
| 853 | 3-065-914-01 | SHEET, COVER | | 862 | X-3951-307-1 | PLATE ASSY, M SLIDE | |
| 854 | 3-065-917-01 | GEAR (1), CAM RELAY | | 863 | X-3951-305-1 | ARM ASSY, LS | |
| 855 | 3-065-934-01 | HLW CUT 0.98X3X0.25 | | 864 | 3-065-901-01 | ROLLER, LS ARM | |
| 856 | 3-065-915-01 | GEAR (1), CAM | | 865 | 3-065-916-01 | GEAR (2), CAM | |
| 857 | 3-065-878-01 | PLATE (S), GUIDE LOCK | | 866 | 3-065-919-01 | ARM, T1 LIMITTER | |
| 858 | 3-065-932-01 | PAN (2 MAIN M1.4X1.6), CAMERA | | 867 | X-3951-308-1 | ARM ASSY, GL | |
| 859 | A-7096-413-A | GEAR (S) ASSY, GUIDE | | 868 | X-3951-300-2 | CHASSIS ASSY, MECHANICAL | |

**CD-354** **LB-073** **PD-156**

## 6-2. ELECTRICAL PARTS LIST

NOTE:

- Due to standardization, replacements in the parts list may be different from the parts specified in the diagrams or the components used on the set.
- -XX, -X mean standardized parts, so they may have some difference from the original one.
- Items marked "*" are not stocked since they are seldom required for routine service. Some delay should be anticipated when ordering these items.
- CAPACITORS:
  uF: µF
- COILS
  uH: µH
- RESISTORS
  All resistors are in ohms.
  METAL: metal-film resistor
  METAL OXIDE: Metal Oxide-film resistor
  F: nonflammable
- SEMICONDUCTORS
  In each case, u: µ, for example:
  uA...: µA... , uPA... , µPA... ,
  uPB... , µPB... , uPC... , µPC... ,
  uPD..., µPD...
- Abbreviation
  CND : Canadian model
  HK : Hong Kong model
  KR : Korea model
  JE : Tourist model
  AR : Argentina model
  BR : Brazilian model

When indicating parts by reference number, please include the board name.

The components identified by mark ⚠ or dotted line with mark ⚠ are critical for safety. Replace only with part number specified.

Les composants identifiés par une marque ⚠ sont critiques pour la sécurité. Ne les remplacer que par une pièce portant le numéro spécifié.

| Ref. No. | Part No. | Description | | | Remarks |
|---|---|---|---|---|---|
| | A-7078-035-A | CD-354 BOARD, COMPLETE | | | |
| | | ********** | | | |
| | | (IC2191 is not included in this complte board.) | | | |
| | | < CAPACITOR > | | | |
| C2191 | 1-126-395-11 | ELECT | 22uF | 20% | 16V |
| C2195 | 1-107-820-11 | CERAMIC CHIP | 0.1uF | | 16V |
| C2196 | 1-128-994-21 | ELECT CHIP | 47uF | 20% | 10V |
| | | < CONNECTOR > | | | |
| CN2191 | 1-766-344-21 | CONNECTOR, FFC/FPC 14P | | | |
| CN2191 | 1-774-638-21 | CONNECTOR, FFC/FPC 14P | | | |
| | | < IC > | | | |
| IC2191 | A-7012-091-A | CCD BLOCK ASSY (CCD IMAGER) (TRV107/TRV108) | | | |
| IC2191 | A-7031-301-A | CCD BLOCK ASSY (CCD IMAGER) (TRV308/TRV408) | | | |
| IC2191 | A-7031-207-A | CCD BLOCK ASSY (CCD IMAGER) (TRV608) | | | |
| | | < COIL > | | | |
| L2191 | 1-469-528-91 | INDUCTOR | 100uH | | |
| | | < TRANSISTOR > | | | |
| Q2191 | 8-729-117-73 | TRANSISTOR | 2SC4178-F13F14-T1 | | |
| | | < RESISTOR > | | | |
| R2191 | 1-208-635-11 | RES-CHIP | 10 | 5% | 1/16W |
| R2193 | 1-218-965-11 | RES-CHIP | 10K | 5% | 1/16W |
| | A-7078-026-A | LB-073 (BW) BOARD, COMPLETE (TRV107/TRV308/TRV408/TRV608) | | | |
| | | ********** | | | |
| | | < CONNECTOR > | | | |
| CN7701 | 1-764-516-21 | CONNECTOR, FFC/FPC (ZIF) 6P | | | |
| | | < DIODE > | | | |
| D7701 | 8-719-070-91 | DIODE TLSU1008(T05,SOY) | | | |
| ⚠D7702 | 8-719-082-33 | DIODE NSCW100-T38 | | | |
| | | < IC > | | | |
| IC7701 | 8-759-581-11 | IC NJM2125F(TE2) | | | |
| | | < TRANSISTOR > | | | |
| Q7701 | 8-729-054-45 | TRANSISTOR | UP04312008S0 | | |
| Q7702 | 8-759-054-48 | TRANSISTOR | UP04601008S0 | | |
| | | < RESISTOR > | | | |
| R7701 | 1-218-959-11 | RES-CHIP | 3.3K | 5% | 1/16W |
| R7702 | 1-208-941-11 | METAL CHIP | 180K | 0.5% | 1/16W |
| R7703 | 1-208-719-11 | METAL CHIP | 33K | 0.5% | 1/16W |
| R7704 | 1-218-959-11 | RES-CHIP | 3.3K | 5% | 1/16W |
| R7705 | 1-218-971-11 | RES-CHIP | 33K | 5% | 1/16W |
| R7706 | 1-211-977-11 | METAL CHIP | 22 | 0.5% | 1/10W |
| | | < THERMISTOR > | | | |
| TH7701 | 1-810-811-11 | THERMISTOR, NTC (1608) | | | |
| | A-7078-036-A | PD-156 (S3) BOARD, COMPLETE (TRV608) | | | |
| | | ********** | | | |
| | A-7078-040-A | PD-156 (S-2.5) BOARD, COMPLETE (TRV107/TRV108/TRV308/TRV408) | | | |
| | | ********** | | | |
| | | < CAPACITOR > | | | |
| C5501 | 1-127-760-11 | CERAMIC CHIP | 4.7uF | 10% | 6.3V |
| C5504 | 1-164-943-11 | CERAMIC CHIP | 0.01uF | 10% | 16V |
| C5505 | 1-164-943-11 | CERAMIC CHIP | 0.01uF | 10% | 16V |
| C5506 | 1-164-943-11 | CERAMIC CHIP | 0.01uF | 10% | 16V |
| C5507 | 1-164-943-11 | CERAMIC CHIP | 0.01uF | 10% | 16V |
| C5509 | 1-110-457-11 | ELECT CHIP | 3.3uF | 20% | 25V |
| C5510 | 1-164-943-11 | CERAMIC CHIP | 0.01uF | 10% | 16V |
| C5511 | 1-164-739-11 | CERAMIC CHIP | 560PF | 5% | 50V |
| C5512 | 1-125-777-11 | CERAMIC CHIP | 0.1uF | 10% | 10V |
| C5513 | 1-164-943-11 | CERAMIC CHIP | 0.01uF | 10% | 16V |
| C5514 | 1-119-750-11 | TANTAL. CHIP | 22uF | 20% | 6.3V |
| C5515 | 1-162-964-11 | CERAMIC CHIP | 0.001uF | 10% | 50V |
| C5516 | 1-164-874-11 | CERAMIC CHIP | 100PF | 5% | 50V |
| C5517 | 1-107-826-11 | CERAMIC CHIP | 0.1uF | 10% | 16V |
| C5518 | 1-107-826-11 | CERAMIC CHIP | 0.1uF | 10% | 16V |

Be sure to read "Precautions upon replacing CCD imager" on page 4-8 when changing the CCD imager.

| Ref. No. | Part No. | Description | | | Remarks |
|---|---|---|---|---|---|
| C5519 | 1-107-826-11 | CERAMIC CHIP | 0.1uF | 10% | 16V |
| C5520 | 1-115-407-11 | ELECT CHIP | 10uF | 20% | 16V |
| C5521 | 1-127-573-11 | CERAMIC CHIP | 1uF | 10% | 16V |
| C5524 | 1-127-573-11 | CERAMIC CHIP | 1uF | 10% | 16V |
| C5527 | 1-164-943-11 | CERAMIC CHIP | 0.01uF | 10% | 16V |
| C5528 | 1-135-177-21 | TANTALUM CHIP | 1uF | 20% | 20V |
| C5530 | 1-164-943-11 | CERAMIC CHIP | 0.01uF | 10% | 16V |
| C5531 | 1-164-943-11 | CERAMIC CHIP | 0.01uF | 10% | 16V |
| C5603 | 1-164-657-11 | CERAMIC CHIP | 0.015uF | 10% | 50V |
| C5604 | 1-125-777-11 | CERAMIC CHIP | 0.1uF | 10% | 10V |
| C5605 | 1-125-777-11 | CERAMIC CHIP | 0.1uF | 10% | 10V |
| ⚠C5606 | 1-131-959-91 | CERAMIC CHIP | 12PF | 10% | 3KV |
| C5607 | 1-115-566-11 | CERAMIC CHIP | 4.7uF | 10% | 10V |
| C5701 | 1-125-777-11 | CERAMIC CHIP | 0.1uF | 10% | 10V |
| | | < CONNECTOR > | | | |
| CN5501 | 1-815-031-11 | CONNECTOR, FFC/FPC (ZIF) 24P | | | |
| * CN5502 | 1-573-984-11 | CONNECTOR, BOARD TO BOARD 10P | | | |
| CN5601 | 1-764-709-11 | CONNECTOR, FFC/FPC (LIF) 10P | | | |
| CN5701 | 1-794-998-21 | PIN, CONNECTOR 20P | | | |
| CN5702 | 1-816-176-11 | CONNECTOR, FFC/FPC (ZIF) 6P | | | |
| CN5703 | 1-816-178-11 | CONNECTOR, FFC/FPC (ZIF) 20P | | | |
| CN5704 | 1-778-508-21 | PIN, CONNECTOR (PC BOARD) 6P | | | |
| | | < DIODE > | | | |
| D5502 | 8-719-084-47 | DIODE 1SV290(TPL3) | | | |
| D5503 | 8-719-073-01 | DIODE MA111-(K8).S0 | | | |
| D5601 | 8-719-073-01 | DIODE MA111-(K8).S0 | | | |
| | | < FERRITE BEAD > | | | |
| FB5501 | 1-414-760-21 | FERRITE | 0uH | | |
| FB5502 | 1-414-760-21 | FERRITE | 0uH | | |
| | | < IC > | | | |
| IC5501 | 8-759-660-92 | IC RB5P003AM1 | | | |
| IC5502 | 8-759-714-77 | IC LZ9FF474 | | | |
| IC5601 | 8-759-564-49 | IC TC7W53FU(TE12R) | | | |
| IC5602 | 8-759-075-70 | IC TA75S393F-TE85R | | | |
| IC5701 | 8-759-573-02 | IC BU9735K-E2 | | | |
| | | < COIL > | | | |
| L5501 | 1-469-525-91 | INDUCTOR | 10uH | | |
| L5502 | 1-412-955-11 | INDUCTOR | 22uH | | |
| L5503 | 1-412-956-21 | INDUCTOR | 27uH (TRV107/TRV108/TRV308/TRV408) | | |
| L5503 | 1-412-949-21 | INDUCTOR | 6.8uH (TRV608) | | |
| L5601 | 1-419-387-21 | INDUCTOR | 100uH | | |
| L5602 | 1-412-056-11 | INDUCTOR | 4.7uH | | |
| | | < TRANSISTOR > | | | |
| Q5502 | 8-729-041-23 | TRANSISTOR | MGSF1P02LT1 | | |
| Q5503 | 8-729-054-48 | TRANSISTOR | N1B04FE-Y/GR(TPLR3) | | |
| Q5504 | 8-729-054-48 | TRANSISTOR | N1B04FE-Y/GR(TPLR3) | | |
| Q5505 | 8-729-042-29 | TRANSISTOR | RN1104F(TPL3) | | |
| Q5505 | 8-729-052-64 | TRANSISTOR | DTC144EHT2L | | |

| Ref. No. | Part No. | Description | | | Remarks |
|---|---|---|---|---|---|
| Q5601 | 8-729-042-29 | TRANSISTOR | RN1104F(TPL3) | | |
| Q5602 | 6-550-083-01 | TRANSISTOR | TPC6C01(TE85R) (TRV107/TRV108/TRV308/TRV408) | | |
| Q5603 | 8-729-054-48 | TRANSISTOR | RN4983FE(TPLR3) | | |
| Q5604 | 6-550-065-01 | TRANSISTOR | CPH5504-TL-E (TRV608) | | |
| | | < RESISTOR > | | | |
| R5501 | 1-218-985-11 | RES-CHIP | 470K | 5% | 1/16W |
| R5503 | 1-208-935-11 | METAL CHIP | 100K | 0.5% | 1/16W (TRV107/TRV108/TRV308/TRV408) |
| R5503 | 1-208-933-11 | METAL CHIP | 82K | 0.5% | 1/16W (TRV608) |
| R5505 | 1-218-967-11 | RES-CHIP | 15K | 5% | 1/16W |
| R5506 | 1-218-958-11 | RES-CHIP | 2.7K | 5% | 1/16W |
| R5507 | 1-218-973-11 | RES-CHIP | 47K | 5% | 1/16W |
| R5508 | 1-218-975-11 | RES-CHIP | 68K | 5% | 1/16W |
| R5509 | 1-218-969-11 | RES-CHIP | 22K | 5% | 1/16W |
| R5510 | 1-218-975-11 | RES-CHIP | 68K | 5% | 1/16W |
| R5511 | 1-218-989-11 | RES-CHIP | 1M | 5% | 1/16W |
| R5512 | 1-218-977-11 | RES-CHIP | 100K | 5% | 1/16W |
| R5513 | 1-218-989-11 | RES-CHIP | 1M | 5% | 1/16W |
| R5515 | 1-218-990-11 | SHORT | 0 | | |
| R5516 | 1-218-965-11 | RES-CHIP | 10K | 5% | 1/16W |
| R5519 | 1-218-990-11 | SHORT | 0 | | |
| R5521 | 1-218-973-11 | RES-CHIP | 47K | 5% | 1/16W |
| R5522 | 1-218-953-11 | RES-CHIP | 1K | 5% | 1/16W (TRV107/TRV108/TRV308/TRV408) |
| R5522 | 1-218-961-11 | RES-CHIP | 4.7K | 5% | 1/16W (TRV608) |
| R5523 | 1-218-990-11 | SHORT | 0 | | |
| R5531 | 1-218-980-11 | RES-CHIP | 180K | 5% | 1/16W |
| R5532 | 1-218-977-11 | RES-CHIP | 100K | 5% | 1/16W |
| R5533 | 1-218-989-11 | RES-CHIP | 1M | 5% | 1/16W |
| R5534 | 1-218-990-11 | SHORT | 0 | | |
| R5601 | 1-216-055-00 | METAL CHIP | 1.8K | 5% | 1/10W |
| R5602 | 1-218-977-11 | RES-CHIP | 100K | 5% | 1/16W |
| R5603 | 1-218-966-11 | RES-CHIP | 12K | 5% | 1/16W |
| R5606 | 1-218-969-11 | RES-CHIP | 22K | 5% | 1/16W |
| R5607 | 1-218-949-11 | RES-CHIP | 470 | 5% | 1/16W |
| R5612 | 1-218-965-11 | RES-CHIP | 10K | 5% | 1/16W |
| R5613 | 1-218-965-11 | RES-CHIP | 10K | 5% | 1/16W (TRV107/TRV108/TRV308/TRV408) |
| R5613 | 1-218-968-11 | RES-CHIP | 18K | 5% | 1/16W (TRV608) |
| R5704 | 1-218-987-11 | RES-CHIP | 680K | 5% | 1/16W |
| | | < COMPOSITION CIRCUIT BLOCK > | | | |
| RB5501 | 1-234-372-21 | RES, NETWORK 100X4 | (1005) | | |
| RB5502 | 1-234-384-11 | RES, NETWORK 1MX4 | (1005) | | |
| RB5503 | 1-234-378-21 | RES, NETWORK 10KX4 | (1005) | | |
| | | < TRANSFORMER > | | | |
| ⚠T5601 | 1-435-227-11 | TRANSFORMER, INVERTER (TRV107/TRV108/TRV308/TRV408) | | | |
| ⚠T5601 | 1-435-785-11 | TRANSFORMER, INVERTER (TRV608) | | | |

**Note :**
The components identified by mark ⚠ or dotted line with mark ⚠ are critical for safety.
Replace only with part number specified.

**Note :**
Les composants identifiés par une marque ⚠ sont critiques pour la sécurité.
Ne les remplacer que par une pièce portant le numéro spécifié.

**SI-033** **VC-272**

| Ref. No. | Part No. | Description | | | Remarks |
|---|---|---|---|---|---|
| | A-7078-027-A | SI-033 BOARD, COMPLETE | | | |
| | | ********** | | | |
| | | (D750, D752, IC750, SE750 and SE751 are not included in this complete board.) | | | |
| | | < CAPACITOR > | | | |
| C751 | 1-128-015-11 | ELECT CHIP | 22uF | 20% | 4V |
| C752 | 1-128-015-11 | ELECT CHIP | 22uF | 20% | 4V |
| | | < CONNECTOR > | | | |
| CN750 | 1-816-232-11 | PIN, CONNECTOR (PC BOARD) 4P | | | |
| * CN751 | 1-695-320-21 | PIN, CONNECTOR (1.5MM)(SMD) 2P | | | |
| CN752 | 1-779-332-11 | CONNECTOR, FFC/FPC 16P | | | |
| | | < DIODE > | | | |
| D750 | 8-719-060-65 | DIODE DAC3825 | | | |
| D751 | 8-719-073-01 | DIODE MA111-(K8).SO | | | |
| D752 | 8-719-078-33 | DIODE BR2222S-71-B2 | | | |
| | | < FERRITE BEAD > | | | |
| FB755 | 1-216-295-91 | SHORT | 0 | | |
| FB756 | 1-414-813-11 | FERRITE | 0uH | | |
| | | < IC > | | | |
| IC750 | 6-701-681-01 | IC RPM7140-V4 (TRV107/TRV408) | | | |
| | | < TRANSISTOR > | | | |
| Q750 | 8-729-141-73 | TRANSISTOR | 2SD1938(F)-S(TX).SO | | |
| | | < RESISTOR > | | | |
| R750 | 1-216-009-91 | RES-CHIP | 22 | 5% | 1/10W |
| R752 | 1-216-041-00 | METAL CHIP | 470 | 5% | 1/10W |
| | | < SENSOR > | | | |
| SE750 | 1-803-042-31 | SENSOR, ANGULAR VELOCITY (PITCH) (SERVICE)(TRV308/TRV408/TRV608) | | | |
| SE751 | 1-803-042-41 | SENSOR, ANGULAR VELOCITY (YAW) (SERVICE)(TRV308/TRV408/TRV608) | | | |
| | A-7028-968-A | VC-272 (N-V) BOARD, COMPLETE (TRV107) | | | |
| | | ********** | | | |
| | A-7028-970-A | VC-272 (N-VM) BOARD, COMPLETE (TRV308/TRV408) | | | |
| | | ********** | | | |
| | A-7028-972-A | VC-272 (N-VMU) BOARD, COMPLETE (TRV608) | | | |
| | | ********** | | | |
| | A-7028-973-A | VC-272 (N-VW) BOARD, COMPLETE (TRV108) | | | |
| | | ********** | | | |
| | | < CAPACITOR > | | | |
| C001 | 1-164-933-11 | CERAMIC CHIP | 220PF | 10% | 50V |
| C002 | 1-125-777-11 | CERAMIC CHIP | 0.1uF | 10% | 10V |
| C003 | 1-119-923-81 | CERAMIC CHIP | 0.047uF | 10% | 10V |
| C004 | 1-125-777-11 | CERAMIC CHIP | 0.1uF | 10% | 10V |
| C005 | 1-125-777-11 | CERAMIC CHIP | 0.1uF | 10% | 10V |
| C008 | 1-164-943-11 | CERAMIC CHIP | 0.01uF | 10% | 16V |
| C009 | 1-164-172-11 | CERAMIC CHIP | 0.0056uF | 10% | 25V |
| C010 | 1-107-819-11 | CERAMIC CHIP | 0.022uF | 10% | 16V |
| C011 | 1-107-819-11 | CERAMIC CHIP | 0.022uF | 10% | 16V |
| C012 | 1-164-935-11 | CERAMIC CHIP | 470PF | 10% | 50V |

| Ref. No. | Part No. | Description | | | Remarks |
|---|---|---|---|---|---|
| C013 | 1-164-941-11 | CERAMIC CHIP | 0.0047uF | 10% | 16V |
| C014 | 1-164-938-11 | CERAMIC CHIP | 0.0015uF | 10% | 50V |
| C015 | 1-164-939-11 | CERAMIC CHIP | 0.0022uF | 10% | 50V |
| C016 | 1-164-937-11 | CERAMIC CHIP | 0.001uF | 10% | 50V |
| C017 | 1-164-935-11 | CERAMIC CHIP | 470PF | 10% | 50V |
| C018 | 1-164-935-11 | CERAMIC CHIP | 470PF | 10% | 50V |
| C019 | 1-164-937-11 | CERAMIC CHIP | 0.001uF | 10% | 50V |
| C020 | 1-165-875-11 | CERAMIC CHIP | 10uF | 10% | 10V |
| C021 | 1-164-937-11 | CERAMIC CHIP | 0.001uF | 10% | 50V |
| C022 | 1-164-937-11 | CERAMIC CHIP | 0.001uF | 10% | 50V |
| C023 | 1-164-937-11 | CERAMIC CHIP | 0.001uF | 10% | 50V |
| C024 | 1-164-937-11 | CERAMIC CHIP | 0.001uF | 10% | 50V |
| C025 | 1-125-777-11 | CERAMIC CHIP | 0.1uF | 10% | 10V |
| C026 | 1-115-566-11 | CERAMIC CHIP | 4.7uF | 10% | 10V |
| C027 | 1-115-566-11 | CERAMIC CHIP | 4.7uF | 10% | 10V |
| C028 | 1-115-566-11 | CERAMIC CHIP | 4.7uF | 10% | 10V |
| C029 | 1-115-566-11 | CERAMIC CHIP | 4.7uF | 10% | 10V |
| C030 | 1-115-566-11 | CERAMIC CHIP | 4.7uF | 10% | 10V |
| C031 | 1-115-566-11 | CERAMIC CHIP | 4.7uF | 10% | 10V |
| C032 | 1-115-566-11 | CERAMIC CHIP | 4.7uF | 10% | 10V |
| C033 | 1-115-566-11 | CERAMIC CHIP | 4.7uF | 10% | 10V |
| C034 | 1-162-974-11 | CERAMIC CHIP | 0.01uF | | 50V |
| C035 | 1-115-566-11 | CERAMIC CHIP | 4.7uF | 10% | 10V |
| C036 | 1-115-566-11 | CERAMIC CHIP | 4.7uF | 10% | 10V |
| C037 | 1-115-566-11 | CERAMIC CHIP | 4.7uF | 10% | 10V |
| C038 | 1-127-688-21 | TANTAL. CHIP | 10uF | 20% | 6.3V |
| C038 | 1-135-259-11 | TANTAL. CHIP | 10uF | 20% | 6.3V |
| C039 | 1-125-838-11 | CERAMIC CHIP | 2.2uF | 10% | 6.3V |
| C040 | 1-119-750-11 | TANTAL. CHIP | 22uF | 20% | 6.3V |
| C041 | 1-125-837-91 | CERAMIC CHIP | 1uF | 10% | 6.3V |
| C042 | 1-164-506-11 | CERAMIC CHIP | 4.7uF | | 16V |
| C043 | 1-164-506-11 | CERAMIC CHIP | 4.7uF | | 16V |
| C045 | 1-119-749-11 | TANTAL. CHIP | 33uF | 20% | 4V |
| C046 | 1-119-750-11 | TANTAL. CHIP | 22uF | 20% | 6.3V |
| C047 | 1-164-505-11 | CERAMIC CHIP | 2.2uF | | 16V |
| C048 | 1-164-156-11 | CERAMIC CHIP | 0.1uF | | 25V |
| C049 | 1-115-566-11 | CERAMIC CHIP | 4.7uF | 10% | 10V |
| C050 | 1-125-838-11 | CERAMIC CHIP | 2.2uF | 10% | 6.3V |
| C051 | 1-119-750-11 | TANTAL. CHIP | 22uF | 20% | 6.3V |
| C052 | 1-115-566-11 | CERAMIC CHIP | 4.7uF | 10% | 10V |
| C053 | 1-125-777-11 | CERAMIC CHIP | 0.1uF | 10% | 10V |
| C054 | 1-117-720-11 | CERAMIC CHIP | 4.7uF | | 10V |
| C055 | 1-164-506-11 | CERAMIC CHIP | 4.7uF | | 16V |
| C057 | 1-164-505-11 | CERAMIC CHIP | 2.2uF | | 16V |
| C058 | 1-164-505-11 | CERAMIC CHIP | 2.2uF | | 16V |
| C062 | 1-127-692-11 | CERAMIC CHIP | 10uF | 10% | 6.3V |
| C101 | 1-164-943-11 | CERAMIC CHIP | 0.01uF | 10% | 16V |
| C102 | 1-104-752-11 | TANTAL. CHIP | 33uF | 20% | 6.3V |
| C103 | 1-164-943-11 | CERAMIC CHIP | 0.01uF | 10% | 16V |
| C104 | 1-164-943-11 | CERAMIC CHIP | 0.01uF | 10% | 16V |
| C106 | 1-107-819-11 | CERAMIC CHIP | 0.022uF | 10% | 16V |
| C107 | 1-107-819-11 | CERAMIC CHIP | 0.022uF | 10% | 16V |
| C108 | 1-164-943-11 | CERAMIC CHIP | 0.01uF | 10% | 16V |
| C109 | 1-164-943-11 | CERAMIC CHIP | 0.01uF | 10% | 16V |
| C110 | 1-164-874-11 | CERAMIC CHIP | 100PF | 5% | 50V |
| C111 | 1-164-878-11 | CERAMIC CHIP | 150PF | 5% | 16V |
| C112 | 1-164-872-11 | CERAMIC CHIP | 82PF | 5% | 50V |
| C113 | 1-125-777-11 | CERAMIC CHIP | 0.1uF | 10% | 10V |
| C114 | 1-125-777-11 | CERAMIC CHIP | 0.1uF | 10% | 10V |
| C115 | 1-164-874-11 | CERAMIC CHIP | 100PF | 5% | 50V |

| Ref. No. | Part No. | Description | | | Remarks |
|---|---|---|---|---|---|
| C116 | 1-164-943-11 | CERAMIC CHIP | 0.01uF | 10% | 16V |
| C117 | 1-164-943-11 | CERAMIC CHIP | 0.01uF | 10% | 16V |
| C119 | 1-127-760-11 | CERAMIC CHIP | 4.7uF | 10% | 6.3V |
| C121 | 1-125-777-11 | CERAMIC CHIP | 0.1uF | 10% | 10V |
| C125 | 1-164-943-11 | CERAMIC CHIP | 0.01uF | 10% | 16V |
| C126 | 1-164-943-11 | CERAMIC CHIP | 0.01uF | 10% | 16V |
| C127 | 1-164-937-11 | CERAMIC CHIP | 0.001uF | 10% | 50V |
| C128 | 1-164-943-11 | CERAMIC CHIP | 0.01uF | 10% | 16V |
| C129 | 1-164-941-11 | CERAMIC CHIP | 0.0047uF | 10% | 16V |
| C130 | 1-164-943-11 | CERAMIC CHIP | 0.01uF | 10% | 16V |
| C131 | 1-164-943-11 | CERAMIC CHIP | 0.01uF | 10% | 16V |
| C132 | 1-164-943-11 | CERAMIC CHIP | 0.01uF | 10% | 16V |
| C133 | 1-164-943-11 | CERAMIC CHIP | 0.01uF | 10% | 16V |
| C134 | 1-117-863-11 | CERAMIC CHIP | 0.47uF | 10% | 6.3V |
| C135 | 1-164-943-11 | CERAMIC CHIP | 0.01uF | 10% | 16V |
| C136 | 1-164-943-11 | CERAMIC CHIP | 0.01uF | 10% | 16V |
| C151 | 1-125-837-91 | CERAMIC CHIP | 1uF | 10% | 6.3V |
| C152 | 1-127-760-11 | CERAMIC CHIP | 4.7uF | 10% | 6.3V |
| C155 | 1-125-777-11 | CERAMIC CHIP | 0.1uF | 10% | 10V |
| C156 | 1-164-392-11 | CERAMIC CHIP | 390PF | 5% | 50V |
| C157 | 1-125-777-11 | CERAMIC CHIP | 0.1uF | 10% | 10V |
| C158 | 1-127-760-11 | CERAMIC CHIP | 4.7uF | 10% | 6.3V |
| C160 | 1-125-777-11 | CERAMIC CHIP | 0.1uF | 10% | 10V |
| C161 | 1-164-943-11 | CERAMIC CHIP | 0.01uF | 10% | 16V |
| C162 | 1-125-777-11 | CERAMIC CHIP | 0.1uF | 10% | 10V |
| C163 | 1-125-777-11 | CERAMIC CHIP | 0.1uF | 10% | 10V |
| C164 | 1-125-777-11 | CERAMIC CHIP | 0.1uF | 10% | 10V |
| C165 | 1-125-777-11 | CERAMIC CHIP | 0.1uF | 10% | 10V |
| C166 | 1-125-777-11 | CERAMIC CHIP | 0.1uF | 10% | 10V |
| C167 | 1-125-777-11 | CERAMIC CHIP | 0.1uF | 10% | 10V |
| C168 | 1-125-777-11 | CERAMIC CHIP | 0.1uF | 10% | 10V |
| C169 | 1-125-777-11 | CERAMIC CHIP | 0.1uF | 10% | 10V |
| C170 | 1-125-777-11 | CERAMIC CHIP | 0.1uF | 10% | 10V |
| C171 | 1-125-777-11 | CERAMIC CHIP | 0.1uF | 10% | 10V |
| C172 | 1-125-777-11 | CERAMIC CHIP | 0.1uF | 10% | 10V |
| C173 | 1-164-943-11 | CERAMIC CHIP | 0.01uF | 10% | 16V |
| C174 | 1-117-863-11 | CERAMIC CHIP | 0.47uF | 10% | 6.3V |
| C175 | 1-125-837-91 | CERAMIC CHIP | 1uF | 10% | 6.3V |
| C176 | 1-125-837-91 | CERAMIC CHIP | 1uF | 10% | 6.3V |
| C177 | 1-164-943-11 | CERAMIC CHIP | 0.01uF | 10% | 16V |
| C178 | 1-164-938-11 | CERAMIC CHIP | 0.0015uF | 10% | 50V |
| C182 | 1-164-943-11 | CERAMIC CHIP | 0.01uF | 10% | 16V |
| C184 | 1-125-777-11 | CERAMIC CHIP | 0.1uF | 10% | 10V |
| C185 | 1-125-837-91 | CERAMIC CHIP | 1uF | 10% | 6.3V |
| C186 | 1-125-777-11 | CERAMIC CHIP | 0.1uF | 10% | 10V |
| C187 | 1-125-777-11 | CERAMIC CHIP | 0.1uF | 10% | 10V |
| C188 | 1-125-777-11 | CERAMIC CHIP | 0.1uF | 10% | 10V |
| C190 | 1-125-837-91 | CERAMIC CHIP | 1uF | 10% | 6.3V |
| C195 | 1-125-777-11 | CERAMIC CHIP | 0.1uF | 10% | 10V |
| C251 | 1-127-692-11 | CERAMIC CHIP | 10uF | 10% | 6.3V |
| C252 | 1-164-943-11 | CERAMIC CHIP | 0.01uF | 10% | 16V |
| C253 | 1-165-708-11 | ELECT | 47uF | 20% | 6.3V |
| C254 | 1-125-777-11 | CERAMIC CHIP | 0.1uF | 10% | 10V |
| C256 | 1-115-467-11 | CERAMIC CHIP | 0.22uF | 10% | 10V |
| C257 | 1-164-941-11 | CERAMIC CHIP | 0.0047uF | 10% | 16V |
| C259 | 1-127-760-11 | CERAMIC CHIP | 4.7uF | 10% | 6.3V |
| C271 | 1-164-858-11 | CERAMIC CHIP | 22PF | 5% | 50V |
| C272 | 1-164-937-11 | CERAMIC CHIP | 0.001uF | 10% | 50V |
| C273 | 1-164-858-11 | CERAMIC CHIP | 22PF | 5% | 50V |
| C276 | 1-115-467-11 | CERAMIC CHIP | 0.22uF | 10% | 10V |

| Ref. No. | Part No. | Description | | | Remarks |
|---|---|---|---|---|---|
| C277 | 1-164-943-11 | CERAMIC CHIP | 0.01uF | 10% | 16V |
| C278 | 1-131-861-91 | TANTAL. CHIP | 4.7uF | 20% | 20V |
| C279 | 1-127-688-21 | TANTAL. CHIP | 10uF | 20% | 6.3V |
| C279 | 1-135-259-11 | TANTAL. CHIP | 10uF | 20% | 6.3V |
| C280 | 1-125-777-11 | CERAMIC CHIP | 0.1uF | 10% | 10V |
| C281 | 1-125-777-11 | CERAMIC CHIP | 0.1uF | 10% | 10V |
| C282 | 1-164-937-11 | CERAMIC CHIP | 0.001uF | 10% | 50V |
| C284 | 1-115-339-11 | CERAMIC CHIP | 0.1uF | 10% | 50V |
| C285 | 1-164-937-11 | CERAMIC CHIP | 0.001uF | 10% | 50V |
| C286 | 1-125-837-91 | CERAMIC CHIP | 1uF | 10% | 6.3V |
| C287 | 1-125-837-91 | CERAMIC CHIP | 1uF | 10% | 6.3V |
| C288 | 1-125-777-11 | CERAMIC CHIP | 0.1uF | 10% | 10V |
| C289 | 1-125-777-11 | CERAMIC CHIP | 0.1uF | 10% | 10V |
| C290 | 1-125-837-91 | CERAMIC CHIP | 1uF | 10% | 6.3V |
| C291 | 1-125-777-11 | CERAMIC CHIP | 0.1uF | 10% | 10V |
| C292 | 1-115-467-11 | CERAMIC CHIP | 0.22uF | 10% | 10V |
| C293 | 1-164-935-11 | CERAMIC CHIP | 470PF | 10% | 50V |
| C294 | 1-125-837-91 | CERAMIC CHIP | 1uF | 10% | 6.3V |
| C295 | 1-125-837-91 | CERAMIC CHIP | 1uF | 10% | 6.3V |
| C296 | 1-125-777-11 | CERAMIC CHIP | 0.1uF | 10% | 10V |
| C297 | 1-104-847-11 | TANTAL. CHIP | 22uF | 20% | 4V |
| C302 | 1-164-943-11 | CERAMIC CHIP | 0.01uF | 10% | 16V |
| C303 | 1-164-941-11 | CERAMIC CHIP | 0.0047uF | 10% | 16V |
| C304 | 1-127-688-21 | TANTAL. CHIP | 10uF | 20% | 6.3V |
| C304 | 1-135-259-11 | TANTAL. CHIP | 10uF | 20% | 6.3V |
| C305 | 1-125-777-11 | CERAMIC CHIP | 0.1uF | 10% | 10V |
| C306 | 1-125-777-11 | CERAMIC CHIP | 0.1uF | 10% | 10V |
| C307 | 1-164-935-11 | CERAMIC CHIP | 470PF | 10% | 50V |
| C308 | 1-164-943-11 | CERAMIC CHIP | 0.01uF | 10% | 16V |
| C309 | 1-115-467-11 | CERAMIC CHIP | 0.22uF | 10% | 10V |
| C310 | 1-110-449-11 | ELECT CHIP | 47uF | 20% | 6.3V |
| C311 | 1-164-937-11 | CERAMIC CHIP | 0.001uF | 10% | 50V |
| C312 | 1-117-863-11 | CERAMIC CHIP | 0.47uF | 10% | 6.3V |
| C313 | 1-164-943-11 | CERAMIC CHIP | 0.01uF | 10% | 16V |
| C315 | 1-164-939-11 | CERAMIC CHIP | 0.0022uF | 10% | 50V |
| C318 | 1-127-760-11 | CERAMIC CHIP | 4.7uF | 10% | 6.3V |
| C319 | 1-125-777-11 | CERAMIC CHIP | 0.1uF | 10% | 10V |
| C352 | 1-127-688-21 | TANTAL. CHIP | 10uF | 20% | 6.3V |
| C352 | 1-135-259-11 | TANTAL. CHIP | 10uF | 20% | 6.3V |
| C354 | 1-127-760-11 | CERAMIC CHIP | 4.7uF | 10% | 6.3V |
| C357 | 1-125-918-11 | ELECT CHIP | 22uF | 20% | 6.3V |
| C358 | 1-164-943-11 | CERAMIC CHIP | 0.01uF | 10% | 16V |
| C359 | 1-127-688-21 | TANTAL. CHIP | 10uF | 20% | 6.3V |
| C359 | 1-135-259-11 | TANTAL. CHIP | 10uF | 20% | 6.3V |
| C363 | 1-115-467-11 | CERAMIC CHIP | 0.22uF | 10% | 10V |
| C364 | 1-117-863-11 | CERAMIC CHIP | 0.47uF | 10% | 6.3V |
| C365 | 1-119-750-11 | TANTAL. CHIP | 22uF | 20% | 6.3V |
| C366 | 1-110-457-11 | ELECT CHIP | 3.3uF | 20% | 25V |
| C367 | 1-127-688-21 | TANTAL. CHIP | 10uF | 20% | 6.3V |
| C367 | 1-135-259-11 | TANTAL. CHIP | 10uF | 20% | 6.3V |
| C369 | 1-115-467-11 | CERAMIC CHIP | 0.22uF | 10% | 10V |
| C371 | 1-115-467-11 | CERAMIC CHIP | 0.22uF | 10% | 10V |
| C372 | 1-115-467-11 | CERAMIC CHIP | 0.22uF | 10% | 10V |
| C374 | 1-110-442-11 | ELECT CHIP | 22uF | 20% | 4V |
| C375 | 1-125-777-11 | CERAMIC CHIP | 0.1uF | 10% | 10V |
| C380 | 1-125-837-91 | CERAMIC CHIP | 1uF | 10% | 6.3V |
| C381 | 1-125-837-91 | CERAMIC CHIP | 1uF | 10% | 6.3V |
| C383 | 1-125-777-11 | CERAMIC CHIP | 0.1uF | 10% | 10V |
| C384 | 1-115-467-11 | CERAMIC CHIP | 0.22uF | 10% | 10V |
| C385 | 1-125-837-91 | CERAMIC CHIP | 1uF | 10% | 6.3V |

## VC-272

| Ref. No. | Part No. | Description | | | Remarks |
|---|---|---|---|---|---|
| C386 | 1-125-837-91 | CERAMIC CHIP | 1uF | 10% | 6.3V |
| C389 | 1-115-467-11 | CERAMIC CHIP | 0.22uF | 10% | 10V |
| C390 | 1-164-937-11 | CERAMIC CHIP | 0.001uF | 10% | 50V |
| C392 | 1-164-943-11 | CERAMIC CHIP | 0.01uF | 10% | 16V |
| C393 | 1-164-943-11 | CERAMIC CHIP | 0.01uF | 10% | 16V |
| C394 | 1-117-863-11 | CERAMIC CHIP | 0.47uF | 10% | 6.3V |
| C396 | 1-164-943-11 | CERAMIC CHIP | 0.01uF | 10% | 16V |
| C397 | 1-164-870-11 | CERAMIC CHIP | 68PF | 5% | 50V |
| C398 | 1-115-467-11 | CERAMIC CHIP | 0.22uF | 10% | 10V |
| C401 | 1-125-837-91 | CERAMIC CHIP | 1uF | 10% | 6.3V |
| C402 | 1-125-777-11 | CERAMIC CHIP | 0.1uF | 10% | 10V |
| C403 | 1-164-850-11 | CERAMIC CHIP | 10PF | 0.50PF | 50V |
| C404 | 1-164-850-11 | CERAMIC CHIP | 10PF | 0.50PF | 50V |
| C405 | 1-125-777-11 | CERAMIC CHIP | 0.1uF | 10% | 10V |
| C406 | 1-164-943-11 | CERAMIC CHIP | 0.01uF | 10% | 16V (TRV308/TRV408/TRV608) |
| C407 | 1-164-943-11 | CERAMIC CHIP | 0.01uF | 10% | 16V (TRV308/TRV408/TRV608) |
| C408 | 1-125-777-11 | CERAMIC CHIP | 0.1uF | 10% | 10V |
| C410 | 1-164-943-11 | CERAMIC CHIP | 0.01uF | 10% | 16V |
| C411 | 1-164-943-11 | CERAMIC CHIP | 0.01uF | 10% | 16V |
| C451 | 1-125-777-11 | CERAMIC CHIP | 0.1uF | 10% | 10V |
| C452 | 1-125-777-11 | CERAMIC CHIP | 0.1uF | 10% | 10V |
| C453 | 1-125-777-11 | CERAMIC CHIP | 0.1uF | 10% | 10V |
| C454 | 1-125-777-11 | CERAMIC CHIP | 0.1uF | 10% | 10V |
| C455 | 1-107-819-11 | CERAMIC CHIP | 0.022uF | 10% | 16V |
| C456 | 1-107-819-11 | CERAMIC CHIP | 0.022uF | 10% | 16V |
| C458 | 1-126-603-11 | ELECT CHIP | 4.7uF | 20% | 35V |
| C459 | 1-125-777-11 | CERAMIC CHIP | 0.1uF | 10% | 10V |
| C460 | 1-125-777-11 | CERAMIC CHIP | 0.1uF | 10% | 10V |
| C461 | 1-125-777-11 | CERAMIC CHIP | 0.1uF | 10% | 10V |
| C462 | 1-125-777-11 | CERAMIC CHIP | 0.1uF | 10% | 10V |
| C463 | 1-125-777-11 | CERAMIC CHIP | 0.1uF | 10% | 10V |
| C464 | 1-164-933-11 | CERAMIC CHIP | 220PF | 10% | 50V |
| C465 | 1-164-941-11 | CERAMIC CHIP | 0.0047uF | 10% | 16V |
| C466 | 1-125-777-11 | CERAMIC CHIP | 0.1uF | 10% | 10V |
| C467 | 1-164-939-11 | CERAMIC CHIP | 0.0022uF | 10% | 50V |
| C468 | 1-164-935-11 | CERAMIC CHIP | 470PF | 10% | 50V |
| C469 | 1-164-939-11 | CERAMIC CHIP | 0.0022uF | 10% | 50V |
| C470 | 1-125-837-91 | CERAMIC CHIP | 1uF | 10% | 6.3V |
| C471 | 1-164-939-11 | CERAMIC CHIP | 0.0022uF | 10% | 50V |
| C475 | 1-107-819-11 | CERAMIC CHIP | 0.022uF | 10% | 16V |
| C476 | 1-164-943-11 | CERAMIC CHIP | 0.01uF | 10% | 16V |
| C477 | 1-119-923-81 | CERAMIC CHIP | 0.047uF | 10% | 10V |
| C478 | 1-119-923-81 | CERAMIC CHIP | 0.047uF | 10% | 10V |
| C479 | 1-164-505-11 | CERAMIC CHIP | 2.2uF | | 16V |
| C480 | 1-125-777-11 | CERAMIC CHIP | 0.1uF | 10% | 10V |
| C481 | 1-164-937-11 | CERAMIC CHIP | 0.001uF | 10% | 50V |
| C482 | 1-164-937-11 | CERAMIC CHIP | 0.001uF | 10% | 50V |
| C483 | 1-164-935-11 | CERAMIC CHIP | 470PF | 10% | 50V |
| C484 | 1-164-935-11 | CERAMIC CHIP | 470PF | 10% | 50V |
| C485 | 1-119-923-81 | CERAMIC CHIP | 0.047uF | 10% | 10V |
| C486 | 1-113-619-11 | CERAMIC CHIP | 0.47uF | | 10V |
| C487 | 1-125-777-11 | CERAMIC CHIP | 0.1uF | 10% | 10V |
| C488 | 1-125-777-11 | CERAMIC CHIP | 0.1uF | 10% | 10V |
| C489 | 1-125-777-11 | CERAMIC CHIP | 0.1uF | 10% | 10V |
| C490 | 1-125-777-11 | CERAMIC CHIP | 0.1uF | 10% | 10V |
| C491 | 1-125-777-11 | CERAMIC CHIP | 0.1uF | 10% | 10V |
| C492 | 1-125-777-11 | CERAMIC CHIP | 0.1uF | 10% | 10V |
| C501 | 1-125-777-11 | CERAMIC CHIP | 0.1uF | 10% | 10V |
| C502 | 1-109-982-11 | CERAMIC CHIP | 1uF | 10% | 10V |
| C503 | 1-126-607-11 | ELECT CHIP | 47uF | 20% | 4V |
| C504 | 1-125-777-11 | CERAMIC CHIP | 0.1uF | 10% | 10V |
| C506 | 1-164-943-11 | CERAMIC CHIP | 0.01uF | 10% | 16V |
| C507 | 1-164-943-11 | CERAMIC CHIP | 0.01uF | 10% | 16V |
| C508 | 1-164-943-11 | CERAMIC CHIP | 0.01uF | 10% | 16V |
| C509 | 1-164-943-11 | CERAMIC CHIP | 0.01uF | 10% | 16V |
| C510 | 1-164-943-11 | CERAMIC CHIP | 0.01uF | 10% | 16V |
| C511 | 1-164-943-11 | CERAMIC CHIP | 0.01uF | 10% | 16V |
| C512 | 1-164-943-11 | CERAMIC CHIP | 0.01uF | 10% | 16V |
| C513 | 1-107-819-11 | CERAMIC CHIP | 0.022uF | 10% | 16V |
| C514 | 1-164-942-11 | CERAMIC CHIP | 0.0068uF | 10% | 16V |
| C515 | 1-164-858-11 | CERAMIC CHIP | 22PF | 5% | 50V |
| C516 | 1-164-856-81 | CERAMIC CHIP | 18PF | 5% | 50V |
| C517 | 1-125-777-11 | CERAMIC CHIP | 0.1uF | 10% | 10V |
| C518 | 1-125-777-11 | CERAMIC CHIP | 0.1uF | 10% | 10V |
| C602 | 1-117-720-11 | CERAMIC CHIP | 4.7uF | | 10V |
| C603 | 1-125-837-91 | CERAMIC CHIP | 1uF | 10% | 6.3V |
| C701 | 1-135-639-11 | ELECT CHIP | 47uF | 20% | 6.3V |
| C708 | 1-115-566-11 | CERAMIC CHIP | 4.7uF | 10% | 10V (TRV107/TRV308/TRV408/TRV608) |
| C710 | 1-125-777-11 | CERAMIC CHIP | 0.1uF | 10% | 10V (TRV108/TRV608) |
| C711 | 1-125-777-11 | CERAMIC CHIP | 0.1uF | 10% | 10V (TRV108) |
| C713 | 1-127-760-11 | CERAMIC CHIP | 4.7uF | 10% | 6.3V (TRV108/TRV608) |
| C806 | 1-125-777-11 | CERAMIC CHIP | 0.1uF | 10% | 10V (TRV608) |
| C808 | 1-125-777-11 | CERAMIC CHIP | 0.1uF | 10% | 10V (TRV608) |
| C809 | 1-125-777-11 | CERAMIC CHIP | 0.1uF | 10% | 10V (TRV608) |
| C810 | 1-125-777-11 | CERAMIC CHIP | 0.1uF | 10% | 10V (TRV608) |
| C813 | 1-125-777-11 | CERAMIC CHIP | 0.1uF | 10% | 10V (TRV608) |
| C818 | 1-125-777-11 | CERAMIC CHIP | 0.1uF | 10% | 10V (TRV608) |
| C821 | 1-127-760-11 | CERAMIC CHIP | 4.7uF | 10% | 6.3V (TRV608) |
| C822 | 1-127-760-11 | CERAMIC CHIP | 4.7uF | 10% | 6.3V (TRV608) |
| C824 | 1-125-837-91 | CERAMIC CHIP | 1uF | 10% | 6.3V (TRV608) |
| C825 | 1-125-837-91 | CERAMIC CHIP | 1uF | 10% | 6.3V (TRV608) |
| C826 | 1-164-850-11 | CERAMIC CHIP | 10PF | 0.50PF | 50V (TRV608) |
| C827 | 1-164-850-11 | CERAMIC CHIP | 10PF | 0.50PF | 50V (TRV608) |
| C901 | 1-125-777-11 | CERAMIC CHIP | 0.1uF | 10% | 10V (TRV308/TRV408/TRV608) |
| C902 | 1-125-777-11 | CERAMIC CHIP | 0.1uF | 10% | 10V (TRV308/TRV408/TRV608) |

| Ref. No. | Part No. | Description | Remarks |
|---|---|---|---|
| C903 | 1-119-923-81 | CERAMIC CHIP 0.047uF 10% 10V (TRV308/TRV408/TRV608) | |
| C904 | 1-119-923-81 | CERAMIC CHIP 0.047uF 10% 10V (TRV308/TRV408/TRV608) | |
| C905 | 1-119-923-81 | CERAMIC CHIP 0.047uF 10% 10V (TRV308/TRV408/TRV608) | |
| C906 | 1-110-666-11 | ELECT CHIP 22uF 20% 6.3V (TRV308/TRV408/TRV608) | |
| C908 | 1-119-923-81 | CERAMIC CHIP 0.047uF 10% 10V (TRV308/TRV408/TRV608) | |
| C910 | 1-110-666-11 | ELECT CHIP 22uF 20% 6.3V (TRV308/TRV408/TRV608) | |
| C911 | 1-128-934-91 | CERAMIC CHIP 0.33uF 20% 10V (TRV308/TRV408/TRV608) | |
| C913 | 1-127-760-11 | CERAMIC CHIP 4.7uF 10% 6.3V (TRV308/TRV408/TRV608) | |
| C2301 | 1-164-862-11 | CERAMIC CHIP 33PF 5% 50V | |
| C2302 | 1-164-862-11 | CERAMIC CHIP 33PF 5% 50V | |
| C2303 | 1-164-858-11 | CERAMIC CHIP 22PF 5% 50V | |
| C2304 | 1-164-858-11 | CERAMIC CHIP 22PF 5% 50V | |
| C2305 | 1-164-876-11 | CERAMIC CHIP 120PF 5% 50V | |
| C2306 | 1-164-876-11 | CERAMIC CHIP 120PF 5% 50V | |
| C2307 | 1-164-862-11 | CERAMIC CHIP 33PF 5% 50V | |
| C2308 | 1-164-862-11 | CERAMIC CHIP 33PF 5% 50V | |
| C2310 | 1-164-878-11 | CERAMIC CHIP 150PF 5% 16V | |
| C2311 | 1-164-878-11 | CERAMIC CHIP 150PF 5% 16V | |
| C2312 | 1-127-692-11 | CERAMIC CHIP 10uF 10% 6.3V | |
| C2315 | 1-164-876-11 | CERAMIC CHIP 120PF 5% 50V | |
| C2316 | 1-164-876-11 | CERAMIC CHIP 120PF 5% 50V | |
| C2317 | 1-125-837-91 | CERAMIC CHIP 1uF 10% 6.3V | |
| C2318 | 1-125-837-91 | CERAMIC CHIP 1uF 10% 6.3V | |
| C2319 | 1-125-838-11 | CERAMIC CHIP 2.2uF 10% 6.3V | |
| C2320 | 1-164-943-11 | CERAMIC CHIP 0.01uF 10% 16V | |
| C2321 | 1-126-246-11 | ELECT CHIP 220uF 20% 4V | |
| C2322 | 1-110-442-11 | ELECT CHIP 22uF 20% 4V | |
| C2323 | 1-126-246-11 | ELECT CHIP 220uF 20% 4V | |
| C2324 | 1-110-442-11 | ELECT CHIP 22uF 20% 4V | |
| C2325 | 1-164-943-11 | CERAMIC CHIP 0.01uF 10% 16V | |
| C2326 | 1-127-692-11 | CERAMIC CHIP 10uF 10% 6.3V | |
| | | < CONNECTOR > | |
| CN101 | 1-766-341-21 | CONNECTOR, FFC/FPC 11P | |
| CN271 | 1-779-331-11 | CONNECTOR, FFC/FPC 14P | |
| CN301 | 1-750-360-21 | CONNECTOR, FFC/FPC (ZIF) 24P | |
| CN701 | 1-794-998-21 | PIN, CONNECTOR 20P | |
| CN702 | 1-766-350-21 | CONNECTOR, FFC/FPC 20P | |
| CN703 | 1-816-177-11 | CONNECTOR, FFC/FPC (ZIF) 16P | |
| * CN704 | 1-695-320-21 | PIN, CONNECTOR (1.5MM)(SMD) 2P | |
| CN705 | 1-779-334-11 | CONNECTOR, FFC/FPC 20P | |
| CN706 | 1-766-340-21 | CONNECTOR, FFC/FPC 10P | |
| CN707 | 1-766-352-21 | CONNECTOR, FFC/FPC 22P | |
| CN709 | 1-779-335-21 | CONNECTOR, FFC/FPC 22P | |
| CN715 | 1-779-327-11 | CONNECTOR, FFC/FPC 6P (TRV608) | |
| CN710 | 1-750-076-21 | CONNECTOR, FFC/FPC 12P | |
| CN711 | 1-764-704-21 | CONNECTOR, FFC/FPC (LIF) 5P | |
| CN712 | 1-766-345-21 | CONNECTOR, FFC/FPC 15P | |
| CN713 | 1-766-346-21 | CONNECTOR, FFC/FPC 16P | |

| Ref. No. | Part No. | Description | Remarks |
|---|---|---|---|
| | | < DIODE > | |
| D001 | 8-719-081-19 | DIODE 1SS383(T5RSONY1) | |
| D002 | 8-719-075-15 | DIODE MAZT082H08S0 | |
| D006 | 6-500-127-01 | DIODE HN2S02FU(T5RSONY) | |
| D007 | 8-719-081-19 | DIODE 1SS383(T5RSONY1) | |
| D151 | 8-719-081-25 | DIODE JDV3C11(TPH3) | |
| D152 | 8-719-081-25 | DIODE JDV3C11(TPH3) | |
| D272 | 8-719-082-63 | DIODE 1SV329(TPL3) | |
| D301 | 8-719-988-61 | DIODE 1SS355TE-17 | |
| D302 | 8-719-073-03 | DIODE MA8082-(K8).S0 | |
| D501 | 8-719-421-67 | DIODE MA132WK-(K8).SO | |
| D502 | 8-719-421-67 | DIODE MA132WK-(K8).SO | |
| D503 | 8-719-421-27 | DIODE MA728-(K8).S0 | |
| D504 | 8-719-988-61 | DIODE 1SS355TE-17 | |
| D505 | 8-719-988-61 | DIODE 1SS355TE-17 | |
| D702 | 8-719-075-15 | DIODE MAZT082H08S0 | |
| | | < PIN CONNECTOR > | |
| ET101 | 1-815-032-21 | PIN, CONNECTOR (CASE, SHIELD) | |
| ET102 | 1-815-032-21 | PIN, CONNECTOR (CASE, SHIELD) | |
| | | < FUSE > | |
| ⚠ F001 | 1-576-406-21 | FUSE, MICRO (1.4A/36V) (1608) | |
| ⚠ F002 | 1-576-406-21 | FUSE, MICRO (1.4A/36V) (1608) | |
| ⚠ F003 | 1-576-406-21 | FUSE, MICRO (1.4A/36V) (1608) | |
| ⚠ F004 | 1-576-406-21 | FUSE, MICRO (1.4A/36V) (1608) | |
| | | < FERRITE BEAD > | |
| FB001 | 1-414-760-21 | FERRITE 0uH | |
| FB101 | 1-414-228-11 | FERRITE 0uH | |
| FB102 | 1-414-228-11 | FERRITE 0uH | |
| FB275 | 1-414-760-21 | FERRITE 0uH | |
| FB601 | 1-414-760-21 | FERRITE 0uH | |
| FB602 | 1-414-760-21 | FERRITE 0uH | |
| FB801 | 1-469-676-22 | FERRITE 0uH (TRV608) | |
| FB802 | 1-469-676-22 | FERRITE 0uH (TRV608) | |
| FB803 | 1-469-676-22 | FERRITE 0uH (TRV608) | |
| | | < IC > | |
| IC001 | 8-752-102-78 | IC CXA3282R-T6 | |
| IC101 | 8-752-093-69 | IC CXA3265R-T4 | |
| IC151 | 8-759-670-78 | IC HG76C012FL | |
| IC153 | 6-800-965-01 | IC BU3095-03FV-E2 | |
| IC251 | 6-701-335-01 | IC BH7873FV-E2 | |
| IC271 | 8-752-386-72 | IC CXD2444R-T4 | |
| IC272 | 8-759-699-92 | IC AD80013AJSTRL | |
| IC301 | 8-759-637-96 | IC MPC17A135DTAEL | |
| IC302 | 8-759-681-42 | IC NJM12902V(TE2) | |
| IC351 | 8-752-102-57 | IC CXA3285BR-T6 | |
| IC401 | 8-759-445-94 | IC BR9080ARFV-WE2 | |
| IC402 | 6-801-122-01 | IC MB91191RPFF-G-168-BND-ER | |
| IC451 | 8-759-640-85 | IC CXA8096R-TBM | |
| IC452 | 8-759-431-41 | IC LB1991V-TLM | |
| IC502 | 6-701-718-01 | IC NJU7285EV(TE2) | |

**Note :**
The components identified by mark ⚠ or dotted line with mark ⚠ are critical for safety.
Replace only with part number specified.

**Note :**
Les composants identifiés par une marque ⚠ sont critiques pour la sécurité.
Ne les remplacer que par une pièce portant le numéro spécifié.

## VC-272

| Ref. No. | Part No. | Description | Remarks |
|---|---|---|---|
| IC503 | 8-752-928-61 | IC CXP921048A-053R-T6 | |
| IC504 | 8-759-679-91 | IC S-817A33ANB-CUW-T2 | |
| IC601 | 8-759-713-19 | IC BH2222FV-E2 | |
| IC701 | 8-759-183-53 | IC TL431CPK-E2 (TRV108) | |
| IC801 | 8-752-416-75 | IC CXD3155TQ-T6 (TRV608) | |
| IC802 | 6-701-692-01 | IC BU7800FV-E2 (TRV608) | |
| IC901 | 8-759-489-19 | IC NJM3230V(TE2) (TRV308/TRV408/TRV608) | |
| IC2301 | 8-759-662-95 | IC BA7665FS-E2 | |
| | | < COIL > | |
| L001 | 1-419-354-21 | INDUCTOR 22uH | |
| L002 | 1-416-670-11 | INDUCTOR 33uH | |
| L003 | 1-412-056-11 | INDUCTOR 4.7uH | |
| L004 | 1-419-354-21 | INDUCTOR 22uH | |
| L005 | 1-419-354-21 | INDUCTOR 22uH | |
| L006 | 1-416-670-11 | INDUCTOR 33uH | |
| L007 | 1-419-354-21 | INDUCTOR 22uH | |
| L008 | 1-469-524-91 | INDUCTOR 4.7uH | |
| L009 | 1-469-524-91 | INDUCTOR 4.7uH | |
| L010 | 1-469-524-91 | INDUCTOR 4.7uH | |
| L011 | 1-469-524-91 | INDUCTOR 4.7uH | |
| L012 | 1-469-526-91 | INDUCTOR 22uH | |
| L013 | 1-469-524-91 | INDUCTOR 4.7uH | |
| L014 | 1-469-526-91 | INDUCTOR 22uH | |
| L016 | 1-414-400-41 | INDUCTOR 22uH | |
| L017 | 1-469-524-91 | INDUCTOR 4.7uH | |
| L101 | 1-414-406-41 | INDUCTOR 220uH | |
| L102 | 1-412-952-11 | INDUCTOR 12uH | |
| L103 | 1-469-526-91 | INDUCTOR 22uH | |
| L104 | 1-414-406-41 | INDUCTOR 220uH | |
| L151 | 1-469-570-21 | INDUCTOR 10uH | |
| L152 | 1-469-570-21 | INDUCTOR 10uH | |
| L154 | 1-469-570-21 | INDUCTOR 10uH | |
| L155 | 1-469-570-21 | INDUCTOR 10uH | |
| L156 | 1-400-196-11 | INDUCTOR 0uH | |
| L271 | 1-469-570-21 | INDUCTOR 10uH | |
| L272 | 1-469-525-91 | INDUCTOR 10uH | |
| L301 | 1-469-525-91 | INDUCTOR 10uH | |
| L303 | 1-469-570-21 | INDUCTOR 10uH | |
| L705 | 1-416-668-41 | INDUCTOR 10uH | (TRV107/TRV308/TRV408/TRV608) |
| L801 | 1-469-526-91 | INDUCTOR 22uH (TRV608) | |
| L901 | 1-469-570-21 | INDUCTOR 10uH | (TRV308/TRV408/TRV608) |
| L2301 | 1-469-525-91 | INDUCTOR 10uH | |
| L2302 | 1-412-948-11 | INDUCTOR 5.6uH | |
| L2303 | 1-412-948-11 | INDUCTOR 5.6uH | |
| L2304 | 1-412-950-11 | INDUCTOR 8.2uH | |
| L2305 | 1-412-950-11 | INDUCTOR 8.2uH | |
| | | < TRANSISTOR > | |
| Q001 | 8-729-037-52 | TRANSISTOR 2SC4738F-Y/GR(TPL3) | |
| Q002 | 8-729-056-54 | TRANSISTOR TPCS8302(TE12L) | |
| Q003 | 6-550-091-01 | TRANSISTOR 2SA2058(TE85L) | |
| Q004 | 8-729-042-29 | TRANSISTOR RN1104F(TPL3) | |
| Q006 | 8-729-054-82 | TRANSISTOR XN09D6100LS0 | |
| Q007 | 8-729-043-60 | TRANSISTOR CPH6102-TL-E | |
| Q008 | 8-729-054-82 | TRANSISTOR XN09D6100LS0 | |
| Q009 | 8-729-054-82 | TRANSISTOR XN09D6100LS0 | |
| Q010 | 8-729-054-82 | TRANSISTOR XN09D6100LS0 | |
| Q011 | 8-729-054-82 | TRANSISTOR XN09D6100LS0 | |
| Q012 | 8-729-054-82 | TRANSISTOR XN09D6100LS0 | |
| Q014 | 8-729-053-52 | TRANSISTOR HN1C01FE-Y/GR(TPLR3) | |
| Q015 | 8-729-106-60 | TRANSISTOR 2SB1132-T100-Q | |
| Q016 | 8-729-037-53 | TRANSISTOR 2SA1832F-Y/GR(TPL3) | |
| Q018 | 8-729-042-29 | TRANSISTOR RN1104F(TPL3) | |
| Q019 | 8-729-053-54 | TRANSISTOR HN1A01FE-Y/GR(TPLR3) | |
| Q020 | 8-729-053-52 | TRANSISTOR HN1C01FE-Y/GR(TPLR3) | |
| Q021 | 8-729-037-52 | TRANSISTOR 2SC4738F-Y/GR(TPL3) | |
| Q022 | 8-729-037-52 | TRANSISTOR 2SC4738F-Y/GR(TPL3) | |
| Q023 | 8-729-037-53 | TRANSISTOR 2SA1832F-Y/GR(TPL3) | |
| Q026 | 8-729-053-54 | TRANSISTOR HN1A01FE-Y/GR(TPLR3) | |
| Q027 | 8-729-037-52 | TRANSISTOR 2SC4738F-Y/GR(TPL3) | |
| Q073 | 8-729-037-52 | TRANSISTOR 2SC4738F-Y/GR(TPL3) | |
| Q101 | 8-729-047-19 | TRANSISTOR 2SA1965-S-TL | |
| Q102 | 8-729-037-53 | TRANSISTOR 2SA1832F-Y/GR(TPL3) | |
| Q103 | 8-729-054-48 | TRANSISTOR HN1B04FE-Y/GR(TPLR3) | |
| Q105 | 8-729-042-29 | TRANSISTOR RN1104F(TPL3) | |
| Q107 | 8-729-037-63 | TRANSISTOR UN9115J-(K8).SO | |
| Q151 | 8-729-054-48 | TRANSISTOR HN1B04FE-Y/GR(TPLR3) | |
| Q152 | 8-729-037-53 | TRANSISTOR 2SA1832F-Y/GR(TPL3) | |
| Q153 | 8-729-037-53 | TRANSISTOR 2SA1832F-Y/GR(TPL3) | |
| Q154 | 8-729-037-53 | TRANSISTOR 2SA1832F-Y/GR(TPL3) | |
| Q159 | 8-729-053-54 | TRANSISTOR HN1A01FE-Y/GR(TPLR3) | |
| Q301 | 8-729-037-52 | TRANSISTOR 2SC4738F-Y/GR(TPL3) | |
| Q302 | 8-729-054-51 | TRANSISTOR RN2910FE(TPLR3) | |
| Q303 | 8-729-037-52 | TRANSISTOR 2SC4738F-Y/GR(TPL3) | |
| Q354 | 8-729-053-52 | TRANSISTOR HN1C01FE-Y/GR(TPLR3) | |
| Q355 | 8-729-053-56 | TRANSISTOR RN4990FE(TPLR3) | |
| Q451 | 8-729-037-52 | TRANSISTOR 2SC4738F-Y/GR(TPL3) | |
| Q501 | 8-729-041-43 | TRANSISTOR HN1L02FU(TE85R) | |
| Q502 | 8-729-042-74 | TRANSISTOR UN9216J-(K8).SO | |
| Q503 | 8-729-053-58 | TRANSISTOR RN1904FE(TPLR3) | |
| Q702 | 6-550-091-01 | TRANSISTOR 2SA2058(TE85L) | (TRV107/TRV308/TRV408/TRV608) |
| Q703 | 8-729-028-26 | TRANSISTOR 2SK1829(TE85L) | (TRV107/TRV308/TRV408/TRV608) |
| Q704 | 8-729-402-16 | TRANSISTOR XN4608-TX | |
| Q706 | 8-729-141-73 | TRANSISTOR 2SD1938(F)-S(TX).SO | (TRV108/TRV608) |
| Q801 | 8-729-037-61 | TRANSISTOR RN2104F(TPL3) (TRV608) | |
| Q2301 | 8-729-053-54 | TRANSISTOR HN1A01FE-Y/GR(TPLR3) | |
| Q2302 | 8-729-037-52 | TRANSISTOR 2SC4738F-Y/GR(TPL3) | |
| Q2303 | 8-729-037-52 | TRANSISTOR 2SC4738F-Y/GR(TPL3) | |
| Q2304 | 8-729-053-52 | TRANSISTOR HN1C01FE-Y/GR(TPLR3) | |
| Q2305 | 8-729-053-56 | TRANSISTOR RN4990FE(TPLR3) | |
| | | < RESISTOR > | |
| R001 | 1-218-969-11 | RES-CHIP 22K 5% 1/16W | |
| R002 | 1-218-971-11 | RES-CHIP 33K 5% 1/16W | |
| R003 | 1-218-953-11 | RES-CHIP 1K 5% 1/16W | |
| R006 | 1-218-969-11 | RES-CHIP 22K 5% 1/16W | |
| R007 | 1-218-953-11 | RES-CHIP 1K 5% 1/16W | |

| Ref. No. | Part No. | Description | | | Remarks |
|---|---|---|---|---|---|
| R008 | 1-218-977-11 | RES-CHIP | 100K | 5% | 1/16W |
| R010 | 1-218-989-11 | RES-CHIP | 1M | 5% | 1/16W |
| R011 | 1-218-945-11 | RES-CHIP | 220 | 5% | 1/16W |
| R012 | 1-218-971-11 | RES-CHIP | 33K | 5% | 1/16W |
| R014 | 1-218-961-11 | RES-CHIP | 4.7K | 5% | 1/16W |
| R016 | 1-218-964-11 | RES-CHIP | 8.2K | 5% | 1/16W |
| R017 | 1-218-953-11 | RES-CHIP | 1K | 5% | 1/16W |
| R018 | 1-218-963-11 | RES-CHIP | 6.8K | 5% | 1/16W |
| R020 | 1-218-965-11 | RES-CHIP | 10K | 5% | 1/16W |
| R021 | 1-218-969-11 | RES-CHIP | 22K | 5% | 1/16W |
| R023 | 1-218-971-11 | RES-CHIP | 33K | 5% | 1/16W |
| R025 | 1-218-973-11 | RES-CHIP | 47K | 5% | 1/16W |
| R026 | 1-218-969-11 | RES-CHIP | 22K | 5% | 1/16W |
| R027 | 1-218-965-11 | RES-CHIP | 10K | 5% | 1/16W |
| R029 | 1-218-961-11 | RES-CHIP | 4.7K | 5% | 1/16W |
| R031 | 1-218-973-11 | RES-CHIP | 47K | 5% | 1/16W |
| R032 | 1-218-969-11 | RES-CHIP | 22K | 5% | 1/16W |
| R033 | 1-218-969-11 | RES-CHIP | 22K | 5% | 1/16W |
| R034 | 1-218-965-11 | RES-CHIP | 10K | 5% | 1/16W |
| R035 | 1-218-973-11 | RES-CHIP | 47K | 5% | 1/16W |
| R036 | 1-218-977-11 | RES-CHIP | 100K | 5% | 1/16W |
| R037 | 1-218-977-11 | RES-CHIP | 100K | 5% | 1/16W |
| R038 | 1-218-969-11 | RES-CHIP | 22K | 5% | 1/16W |
| R040 | 1-218-969-11 | RES-CHIP | 22K | 5% | 1/16W |
| R041 | 1-208-935-11 | METAL CHIP | 100K | 0.5% | 1/16W (TRV107/TRV108/TRV308/TRV408) |
| R041 | 1-208-931-11 | METAL CHIP | 68K | 0.5% | 1/16W (TRV608) |
| R042 | 1-218-965-11 | RES-CHIP | 10K | 5% | 1/16W (TRV107/TRV108/TRV308/TRV408) |
| R042 | 1-218-969-11 | RES-CHIP | 22K | 5% | 1/16W (TRV608) |
| R043 | 1-208-943-11 | METAL CHIP | 220K | 0.5% | 1/16W |
| R044 | 1-208-935-11 | METAL CHIP | 100K | 0.5% | 1/16W |
| R045 | 1-208-721-11 | METAL CHIP | 39K | 0.5% | 1/16W (TRV107/TRV108/TRV308/TRV408) |
| R045 | 1-208-927-11 | METAL CHIP | 47K | 0.5% | 1/16W (TRV608) |
| R046 | 1-208-703-11 | METAL CHIP | 6.8K | 0.5% | 1/16W (TRV107/TRV108/TRV308/TRV408) |
| R046 | 1-208-713-11 | METAL CHIP | 18K | 0.5% | 1/16W (TRV608) |
| R047 | 1-218-977-11 | RES-CHIP | 100K | 5% | 1/16W |
| R048 | 1-218-977-11 | RES-CHIP | 100K | 5% | 1/16W |
| R049 | 1-218-990-11 | SHORT | 0 | | |
| R050 | 1-208-943-11 | METAL CHIP | 220K | 0.5% | 1/16W |
| R051 | 1-208-931-11 | METAL CHIP | 68K | 0.5% | 1/16W |
| R054 | 1-218-990-11 | SHORT | 0 | | |
| R077 | 1-218-977-11 | RES-CHIP | 100K | 5% | 1/16W |
| R078 | 1-218-966-11 | RES-CHIP | 12K | 5% | 1/16W |
| R101 | 1-218-938-11 | RES-CHIP | 56 | 5% | 1/16W |
| R102 | 1-218-950-11 | RES-CHIP | 560 | 5% | 1/16W |
| R105 | 1-218-941-81 | RES-CHIP | 100 | 5% | 1/16W |
| R106 | 1-218-970-11 | RES-CHIP | 27K | 5% | 1/16W |
| R107 | 1-218-957-11 | RES-CHIP | 2.2K | 5% | 1/16W |
| R108 | 1-218-961-11 | RES-CHIP | 4.7K | 5% | 1/16W |
| R109 | 1-218-970-11 | RES-CHIP | 27K | 5% | 1/16W |
| R110 | 1-218-945-11 | RES-CHIP | 220 | 5% | 1/16W |
| R111 | 1-218-945-11 | RES-CHIP | 220 | 5% | 1/16W |
| R112 | 1-218-946-11 | RES-CHIP | 270 | 5% | 1/16W |
| R113 | 1-218-945-11 | RES-CHIP | 220 | 5% | 1/16W |
| R115 | 1-218-971-11 | RES-CHIP | 33K | 5% | 1/16W |
| R116 | 1-218-958-11 | RES-CHIP | 2.7K | 5% | 1/16W |
| R117 | 1-218-958-11 | RES-CHIP | 2.7K | 5% | 1/16W |
| R118 | 1-208-939-11 | METAL CHIP | 150K | 0.5% | 1/16W |
| R154 | 1-218-965-11 | RES-CHIP | 10K | 5% | 1/16W |
| R155 | 1-218-954-11 | RES-CHIP | 1.2K | 5% | 1/16W |
| R156 | 1-218-957-11 | RES-CHIP | 2.2K | 5% | 1/16W |
| R157 | 1-218-957-11 | RES-CHIP | 2.2K | 5% | 1/16W |
| R158 | 1-218-957-11 | RES-CHIP | 2.2K | 5% | 1/16W |
| R163 | 1-218-990-11 | SHORT | 0 | | |
| R166 | 1-218-990-11 | SHORT | 0 | | |
| R168 | 1-218-962-11 | RES-CHIP | 5.6K | 5% | 1/16W |
| R169 | 1-218-953-11 | RES-CHIP | 1K | 5% | 1/16W |
| R170 | 1-218-963-11 | RES-CHIP | 6.8K | 5% | 1/16W |
| R171 | 1-218-949-11 | RES-CHIP | 470 | 5% | 1/16W |
| R172 | 1-218-941-81 | RES-CHIP | 100 | 5% | 1/16W |
| R173 | 1-218-972-11 | RES-CHIP | 39K | 5% | 1/16W |
| R174 | 1-218-952-11 | RES-CHIP | 820 | 5% | 1/16W |
| R175 | 1-218-959-11 | RES-CHIP | 3.3K | 5% | 1/16W |
| R177 | 1-218-966-11 | RES-CHIP | 12K | 5% | 1/16W |
| R178 | 1-218-949-11 | RES-CHIP | 470 | 5% | 1/16W |
| R179 | 1-218-945-11 | RES-CHIP | 220 | 5% | 1/16W |
| R180 | 1-218-962-11 | RES-CHIP | 5.6K | 5% | 1/16W |
| R181 | 1-218-966-11 | RES-CHIP | 12K | 5% | 1/16W |
| R182 | 1-218-946-11 | RES-CHIP | 270 | 5% | 1/16W |
| R183 | 1-218-946-11 | RES-CHIP | 270 | 5% | 1/16W |
| R184 | 1-218-966-11 | RES-CHIP | 12K | 5% | 1/16W |
| R185 | 1-218-966-11 | RES-CHIP | 12K | 5% | 1/16W |
| R186 | 1-218-946-11 | RES-CHIP | 270 | 5% | 1/16W |
| R188 | 1-218-966-11 | RES-CHIP | 12K | 5% | 1/16W |
| R189 | 1-218-966-11 | RES-CHIP | 12K | 5% | 1/16W |
| R190 | 1-218-946-11 | RES-CHIP | 270 | 5% | 1/16W |
| R192 | 1-218-966-11 | RES-CHIP | 12K | 5% | 1/16W |
| R193 | 1-218-989-11 | RES-CHIP | 1M | 5% | 1/16W |
| R195 | 1-218-967-11 | RES-CHIP | 15K | 5% | 1/16W |
| R196 | 1-218-967-11 | RES-CHIP | 15K | 5% | 1/16W |
| R197 | 1-218-962-11 | RES-CHIP | 5.6K | 5% | 1/16W |
| R198 | 1-218-945-11 | RES-CHIP | 220 | 5% | 1/16W |
| R199 | 1-218-953-11 | RES-CHIP | 1K | 5% | 1/16W |
| R200 | 1-218-965-11 | RES-CHIP | 10K | 5% | 1/16W |
| R205 | 1-218-949-11 | RES-CHIP | 470 | 5% | 1/16W |
| R208 | 1-218-990-11 | SHORT | 0 | | |
| R210 | 1-216-864-11 | METAL CHIP | 0 | 5% | 1/16W |
| R212 | 1-216-864-11 | METAL CHIP | 0 | 5% | 1/16W |
| R217 | 1-218-949-11 | RES-CHIP | 470 | 5% | 1/16W |
| R251 | 1-218-957-11 | RES-CHIP | 2.2K | 5% | 1/16W |
| R253 | 1-218-965-11 | RES-CHIP | 10K | 5% | 1/16W |
| R254 | 1-218-968-11 | RES-CHIP | 18K | 5% | 1/16W |
| R255 | 1-218-964-11 | RES-CHIP | 8.2K | 5% | 1/16W |
| R256 | 1-218-990-11 | SHORT | 0 | | |
| R274 | 1-218-977-11 | RES-CHIP | 100K | 5% | 1/16W |
| R275 | 1-218-990-11 | SHORT | 0 | | |

## VC-272

| Ref. No. | Part No. | Description | | | Remarks |
|---|---|---|---|---|---|
| R280 | 1-218-989-11 | RES-CHIP | 1M | 5% | 1/16W |
| R281 | 1-218-985-11 | RES-CHIP | 470K | 5% | 1/16W |
| R293 | 1-218-990-11 | SHORT | 0 | | |
| R294 | 1-216-864-11 | METAL CHIP | 0 | 5% | 1/16W |
| R301 | 1-218-973-11 | RES-CHIP | 47K | 5% | 1/16W |
| R304 | 1-218-953-11 | RES-CHIP | 1K | 5% | 1/16W |
| R306 | 1-208-635-11 | RES-CHIP | 10 | 5% | 1/16W |
| R307 | 1-218-989-11 | RES-CHIP | 1M | 5% | 1/16W |
| R308 | 1-218-957-11 | RES-CHIP | 2.2K | 5% | 1/16W |
| R309 | 1-218-965-11 | RES-CHIP | 10K | 5% | 1/16W |
| R310 | 1-218-981-11 | RES-CHIP | 220K | 5% | 1/16W |
| R311 | 1-218-985-11 | RES-CHIP | 470K | 5% | 1/16W |
| R312 | 1-218-985-11 | RES-CHIP | 470K | 5% | 1/16W |
| R313 | 1-218-957-11 | RES-CHIP | 2.2K | 5% | 1/16W |
| R314 | 1-218-967-11 | RES-CHIP | 15K | 5% | 1/16W |
| R316 | 1-218-985-11 | RES-CHIP | 470K | 5% | 1/16W |
| R317 | 1-218-953-11 | RES-CHIP | 1K | 5% | 1/16W |
| R318 | 1-218-953-11 | RES-CHIP | 1K | 5% | 1/16W |
| R319 | 1-218-947-11 | RES-CHIP | 330 | 5% | 1/16W |
| R321 | 1-218-953-11 | RES-CHIP | 1K | 5% | 1/16W |
| R322 | 1-218-965-11 | RES-CHIP | 10K | 5% | 1/16W |
| R323 | 1-218-973-11 | RES-CHIP | 47K | 5% | 1/16W |
| R351 | 1-218-953-11 | RES-CHIP | 1K | 5% | 1/16W |
| R356 | 1-218-990-11 | SHORT | 0 | | |
| R363 | 1-218-964-11 | RES-CHIP | 8.2K | 5% | 1/16W |
| R364 | 1-218-977-11 | RES-CHIP | 100K | 5% | 1/16W |
| R368 | 1-218-979-11 | RES-CHIP | 150K | 5% | 1/16W |
| R372 | 1-218-973-11 | RES-CHIP | 47K | 5% | 1/16W |
| R373 | 1-218-985-11 | RES-CHIP | 470K | 5% | 1/16W |
| R379 | 1-218-952-11 | RES-CHIP | 820 | 5% | 1/16W |
| R382 | 1-218-973-11 | RES-CHIP | 47K | 5% | 1/16W |
| R401 | 1-218-953-11 | RES-CHIP | 1K | 5% | 1/16W |
| R402 | 1-218-986-11 | RES-CHIP | 560K | 5% | 1/16W |
| R404 | 1-218-977-11 | RES-CHIP | 100K | 5% | 1/16W |
| R417 | 1-218-957-11 | RES-CHIP | 2.2K | 5% | 1/16W |
| R428 | 1-218-977-11 | RES-CHIP | 100K | 5% | 1/16W |
| R441 | 1-218-970-11 | METAL CHIP | 27K | 0.5% | 1/16W |
| | | | (TRV107/TRV308/TRV408/TRV608) | | |
| R441 | 1-218-977-11 | RES-CHIP | 100K | 5% | 1/16W |
| | | | | | (TRV108) |
| R442 | 1-208-935-11 | METAL CHIP | 100K | 0.5% | 1/16W |
| | | | (TRV107/TRV308/TRV408/TRV608) | | |
| R451 | 1-218-973-11 | RES-CHIP | 47K | 5% | 1/16W |
| R452 | 1-218-983-11 | RES-CHIP | 330K | 5% | 1/16W |
| R457 | 1-218-949-11 | RES-CHIP | 470 | 5% | 1/16W |
| R458 | 1-217-671-11 | METAL CHIP | 1 | 5% | 1/10W |
| R459 | 1-217-671-11 | METAL CHIP | 1 | 5% | 1/10W |
| R460 | 1-217-671-11 | METAL CHIP | 1 | 5% | 1/10W |
| R461 | 1-218-944-11 | RES-CHIP | 180 | 5% | 1/16W |
| R462 | 1-218-943-11 | RES-CHIP | 150 | 5% | 1/16W |
| R464 | 1-218-949-11 | RES-CHIP | 470 | 5% | 1/16W |
| R465 | 1-218-961-11 | RES-CHIP | 4.7K | 5% | 1/16W |
| R466 | 1-218-990-11 | SHORT | 0 | | |
| R467 | 1-218-967-11 | RES-CHIP | 15K | 5% | 1/16W |
| R468 | 1-218-959-11 | RES-CHIP | 3.3K | 5% | 1/16W |
| R469 | 1-218-976-11 | RES-CHIP | 82K | 5% | 1/16W |
| R470 | 1-218-990-11 | SHORT | 0 | | |
| R471 | 1-218-446-11 | METAL CHIP | 1 | 5% | 1/16W |
| R472 | 1-218-446-11 | METAL CHIP | 1 | 5% | 1/16W |
| R474 | 1-218-973-11 | RES-CHIP | 47K | 5% | 1/16W |
| R480 | 1-218-967-11 | RES-CHIP | 15K | 5% | 1/16W |
| R481 | 1-218-961-11 | RES-CHIP | 4.7K | 5% | 1/16W |
| R482 | 1-218-989-11 | RES-CHIP | 1M | 5% | 1/16W |
| R483 | 1-218-972-11 | RES-CHIP | 39K | 5% | 1/16W |
| R484 | 1-216-789-11 | METAL CHIP | 2.2 | 5% | 1/16W |
| R485 | 1-216-789-11 | METAL CHIP | 2.2 | 5% | 1/16W |
| R486 | 1-216-789-11 | METAL CHIP | 2.2 | 5% | 1/16W |
| R502 | 1-218-957-11 | RES-CHIP | 2.2K | 5% | 1/16W |
| R518 | 1-208-943-11 | METAL CHIP | 220K | 0.5% | 1/16W |
| R519 | 1-208-943-11 | METAL CHIP | 220K | 0.5% | 1/16W |
| R520 | 1-218-985-11 | METAL CHIP | 470K | 0.5% | 1/16W |
| R521 | 1-218-985-11 | METAL CHIP | 470K | 0.5% | 1/16W |
| R525 | 1-218-953-11 | RES-CHIP | 1K | 5% | 1/16W |
| R542 | 1-218-973-11 | RES-CHIP | 47K | 5% | 1/16W |
| R543 | 1-218-986-11 | RES-CHIP | 560K | 5% | 1/16W |
| R552 | 1-219-570-11 | RES-CHIP | 10M | 5% | 1/16W |
| R554 | 1-218-977-11 | RES-CHIP | 100K | 5% | 1/16W |
| R558 | 1-218-949-11 | RES-CHIP | 470 | 5% | 1/16W |
| R559 | 1-218-935-11 | RES-CHIP | 33 | 5% | 1/16W |
| R561 | 1-218-957-11 | RES-CHIP | 2.2K | 5% | 1/16W |
| R562 | 1-218-953-11 | RES-CHIP | 1K | 5% | 1/16W |
| R567 | 1-218-959-11 | RES-CHIP | 3.3K | 5% | 1/16W |
| R569 | 1-218-965-11 | RES-CHIP | 10K | 5% | 1/16W |
| R611 | 1-218-965-11 | RES-CHIP | 10K | 5% | 1/16W |
| R613 | 1-218-965-11 | RES-CHIP | 10K | 5% | 1/16W |
| | | | | | (TRV108) |
| R613 | 1-218-974-11 | RES-CHIP | 56K | 5% | 1/16W |
| | | | | | (TRV107) |
| R613 | 1-218-975-11 | RES-CHIP | 68K | 5% | 1/16W |
| | | | | | (TRV308/TRV408) |
| R613 | 1-218-977-11 | RES-CHIP | 100K | 5% | 1/16W |
| | | | | | (TRV608) |
| R614 | 1-218-973-11 | RES-CHIP | 47K | 5% | 1/16W |
| | | | | | (TRV608) |
| R614 | 1-218-974-11 | RES-CHIP | 56K | 5% | 1/16W |
| | | | | | (TRV308/TRV408) |
| R614 | 1-218-975-11 | RES-CHIP | 68K | 5% | 1/16W |
| | | | | | (TRV107) |
| R701 | 1-218-953-11 | RES-CHIP | 1K | 5% | 1/16W |
| | | | (TRV107/TRV308/TRV408/TRV608) | | |
| R703 | 1-218-977-11 | RES-CHIP | 100K | 5% | 1/16W |
| | | | (TRV107/TRV308/TRV408/TRV608) | | |
| R704 | 1-218-953-11 | RES-CHIP | 1K | 5% | 1/16W |
| | | | (TRV107/TRV308/TRV408/TRV608) | | |
| R705 | 1-218-962-11 | RES-CHIP | 5.6K | 5% | 1/16W |
| R706 | 1-218-953-11 | RES-CHIP | 1K | 5% | 1/16W |
| R707 | 1-218-969-11 | RES-CHIP | 22K | 5% | 1/16W |
| R713 | 1-218-945-11 | RES-CHIP | 220 | 5% | 1/16W |
| R714 | 1-218-977-11 | RES-CHIP | 100K | 5% | 1/16W |
| | | | | | (TRV608) |
| R715 | 1-218-979-11 | RES-CHIP | 150K | 5% | 1/16W |
| | | | | | (TRV608) |
| R716 | 1-218-956-11 | RES-CHIP | 1.8K | 5% | 1/16W |
| | | | | | (TRV608) |
| R716 | 1-218-943-11 | RES-CHIP | 150 | 5% | 1/16W |
| | | | | | (TRV108) |
| R717 | 1-208-643-11 | RES-CHIP | 22 | 5% | 1/16W |
| | | | | | (TRV108) |

| Ref. No. | Part No. | Description | | | Remarks |
|---|---|---|---|---|---|
| R718 | 1-208-687-11 | METAL CHIP | 1.5K | 0.5% | 1/16W (TRV108) |
| R719 | 1-208-699-11 | METAL CHIP | 4.7K | 0.5% | 1/16W (TRV108) |
| R721 | 1-218-990-11 | SHORT | 0 | | |
| R722 | 1-218-964-11 | RES-CHIP | 8.2K | 5% | 1/16W (TRV608) |
| R801 | 1-218-989-11 | RES-CHIP | 1M | 5% | 1/16W (TRV608) |
| R802 | 1-218-989-11 | RES-CHIP | 1M | 5% | 1/16W (TRV608) |
| R811 | 1-218-977-11 | RES-CHIP | 100K | 5% | 1/16W (TRV608) |
| R816 | 1-218-955-11 | RES-CHIP | 1.5K | 5% | 1/16W (TRV608) |
| R820 | 1-218-990-11 | SHORT | 0 | | (TRV608) |
| R905 | 1-218-989-11 | RES-CHIP | 1M | 5% | 1/16W (TRV308/TRV408/TRV608) |
| R906 | 1-218-965-11 | RES-CHIP | 10K | 5% | 1/16W (TRV308/TRV408/TRV608) |
| R907 | 1-218-965-11 | RES-CHIP | 10K | 5% | 1/16W (TRV308/TRV408/TRV608) |
| R908 | 1-218-989-11 | RES-CHIP | 1M | 5% | 1/16W (TRV308/TRV408/TRV608) |
| R909 | 1-218-967-11 | RES-CHIP | 15K | 5% | 1/16W (TRV308/TRV408/TRV608) |
| R2301 | 1-218-946-11 | RES-CHIP | 270 | 5% | 1/16W |
| R2302 | 1-218-946-11 | RES-CHIP | 270 | 5% | 1/16W |
| R2307 | 1-218-953-11 | RES-CHIP | 1K | 5% | 1/16W |
| R2310 | 1-218-945-11 | RES-CHIP | 220 | 5% | 1/16W |
| R2311 | 1-218-945-11 | RES-CHIP | 220 | 5% | 1/16W |
| R2312 | 1-218-945-11 | RES-CHIP | 220 | 5% | 1/16W |
| R2313 | 1-218-945-11 | RES-CHIP | 220 | 5% | 1/16W |
| R2314 | 1-218-949-11 | RES-CHIP | 470 | 5% | 1/16W |
| R2315 | 1-218-965-11 | RES-CHIP | 10K | 5% | 1/16W |
| R2316 | 1-218-949-11 | RES-CHIP | 470 | 5% | 1/16W |
| R2317 | 1-218-965-11 | RES-CHIP | 10K | 5% | 1/16W |
| R2318 | 1-218-965-11 | RES-CHIP | 10K | 5% | 1/16W |
| R2319 | 1-218-968-11 | RES-CHIP | 18K | 5% | 1/16W |
| R2320 | 1-218-965-11 | RES-CHIP | 10K | 5% | 1/16W |
| R2321 | 1-218-968-11 | RES-CHIP | 18K | 5% | 1/16W |
| | | < COMPOSITION CIRCUIT BLOCK > | | | |
| RB001 | 1-234-371-21 | RES, NETWORK 47X4 | | (1005) | |
| RB101 | 1-234-379-21 | RES, NETWORK 22KX4 | | (1005) | |
| RB102 | 1-234-383-21 | RES, NETWORK 470KX4 | | (1005) | |
| RB151 | 1-234-378-21 | RES, NETWORK 10KX4 | | (1005) | |
| RB302 | 1-234-379-21 | RES, NETWORK 22KX4 | | (1005) | |
| RB351 | 1-234-377-21 | RES, NETWORK 4.7KX4 | | (1005) | |
| RB352 | 1-234-380-21 | RES, NETWORK 47KX4 | | (1005) | |
| RB401 | 1-234-381-21 | RES, NETWORK 100KX4 | | (1005) | |
| RB402 | 1-234-374-21 | RES, NETWORK 470X4 | | (1005) | (TRV308/TRV408/TRV608) |
| RB403 | 1-234-378-21 | RES, NETWORK 10KX4 | | (1005) | |
| RB404 | 1-234-376-21 | RES, NETWORK 2.2KX4 | | (1005) | |
| RB407 | 1-234-380-21 | RES, NETWORK 47KX4 | | (1005) | |
| RB408 | 1-234-381-21 | RES, NETWORK 100KX4 | | (1005) | |
| RB409 | 1-234-381-21 | RES, NETWORK 100KX4 | | (1005) | |
| RB451 | 1-234-381-21 | RES, NETWORK 100KX4 | | (1005) | |

| Ref. No. | Part No. | Description | | Remarks |
|---|---|---|---|---|
| RB452 | 1-234-378-21 | RES, NETWORK 10KX4 | (1005) | |
| RB501 | 1-234-375-21 | RES, NETWORK 1KX4 | (1005) | |
| RB502 | 1-234-383-21 | RES, NETWORK 470KX4 | (1005) | |
| RB503 | 1-234-383-21 | RES, NETWORK 470KX4 | (1005) | |
| RB504 | 1-234-375-21 | RES, NETWORK 1KX4 | (1005) | |
| RB505 | 1-234-380-21 | RES, NETWORK 47KX4 | (1005) | |
| RB507 | 1-234-376-21 | RES, NETWORK 2.2KX4 | (1005) | |
| RB508 | 1-234-384-11 | RES, NETWORK 1MX4 | (1005) | |
| RB509 | 1-234-382-21 | RES, NETWORK 220KX4 | (1005) | |
| RB510 | 1-234-375-21 | RES, NETWORK 1KX4 | (1005) | |
| RB511 | 1-234-383-21 | RES, NETWORK 470KX4 | (1005) | |
| RB513 | 1-234-376-21 | RES, NETWORK 2.2KX4 | (1005) | |
| RB514 | 1-234-381-21 | RES, NETWORK 100KX4 | (1005) | |
| RB701 | 1-234-400-21 | CONDUCTOR, NETWORK | (2010) | (TRV108) |
| RB704 | 1-234-400-21 | CONDUCTOR, NETWORK | (2010) | (TRV107/TRV308/TRV408/TRV608) |
| RB705 | 1-234-369-21 | RES, NETWORK 10X4 | (1005) | |
| RB707 | 1-234-400-21 | CONDUCTOR, NETWORK | (2010) | (TRV108) |
| RB801 | 1-234-714-11 | RES, NETWORK 56X4 | (1005) | (TRV608) |
| RB901 | 1-234-379-21 | RES, NETWORK 22KX4 | (1005) | (TRV308/TRV408/TRV608) |
| RB902 | 1-234-379-21 | RES, NETWORK 22KX4 | (1005) | (TRV308/TRV408/TRV608) |
| RB2301 | 1-234-376-21 | RES, NETWORK 2.2KX4 | (1005) | |
| RB2302 | 1-234-376-21 | RES, NETWORK 2.2KX4 | (1005) | |
| RB2303 | 1-234-723-11 | RES, NETWORK 75X4 | (1005) | |
| | | < TRANSFORMER > | | |
| T001 | 1-435-252-21 | TRANSFORMER, DC-DC CONVERTER | | |
| T001 | 1-435-252-11 | TRANSFORMER, DC-DC CONVERTER | | |
| | | < VARISTOR > | | |
| VDR701 | 1-803-974-21 | VARISTOR, CHIP | | |
| VDR704 | 1-803-974-21 | VARISTOR, CHIP | | |
| VDR706 | 1-803-974-21 | VARISTOR, CHIP | | |
| VDR707 | 1-803-974-21 | VARISTOR, CHIP | | |
| | | < VIBRATOR > | | |
| X271 | 1-760-320-11 | VIBRATOR, CRYSTAL (28.636363MHz) | | |
| X401 | 1-760-655-41 | VIBRATOR, CRYSTAL (20MHz) | | |
| X501 | 1-795-375-11 | VIBRATOR, CERAMIC (20MHz) | | |
| X502 | 1-760-458-21 | VIBRATOR, CRYSTAL (32.768kHz) | | |
| X801 | 1-781-620-21 | VIBRATOR, CERAMIC (48MHz) (TRV608) | | |
| X802 | 1-767-399-11 | VIBRATOR, CRYSTAL (24.576MHz) (TRV608) | | |

| | | | | | |
|---|---|---|---|---|---|
| | A-7078-025-A | VF-150 (BW) BOARD, COMPLETE (TRV107/TRV308/TRV408/TRV608) | | | |
| | | ********** | | | |
| | | < CAPACITOR > | | | |
| C2001 | 1-127-760-11 | CERAMIC CHIP | 4.7uF | 10% | 6.3V |
| C2003 | 1-164-943-11 | CERAMIC CHIP | 0.01uF | 10% | 16V |
| C2004 | 1-164-943-11 | CERAMIC CHIP | 0.01uF | 10% | 16V |
| C2005 | 1-164-943-11 | CERAMIC CHIP | 0.01uF | 10% | 16V |
| C2006 | 1-164-943-11 | CERAMIC CHIP | 0.01uF | 10% | 16V |
| C2008 | 1-164-943-11 | CERAMIC CHIP | 0.01uF | 10% | 16V |
| C2009 | 1-164-739-11 | CERAMIC CHIP | 560PF | 5% | 50V |
| C2010 | 1-125-777-11 | CERAMIC CHIP | 0.1uF | 10% | 10V |
| C2011 | 1-107-687-11 | TANTAL. CHIP | 3.3uF | 20% | 20V |
| C2012 | 1-162-964-11 | CERAMIC CHIP | 0.001uF | 10% | 50V |

## VF-150

| Ref. No. | Part No. | Description | | | Remarks |
|---|---|---|---|---|---|
| C2013 | 1-164-943-11 | CERAMIC CHIP | 0.01uF | 10% | 16V |
| C2014 | 1-164-876-11 | CERAMIC CHIP | 120PF | 5% | 50V |
| C2015 | 1-125-837-91 | CERAMIC CHIP | 1uF | 10% | 6.3V |
| C2016 | 1-125-837-91 | CERAMIC CHIP | 1uF | 10% | 6.3V |
| C2017 | 1-125-837-91 | CERAMIC CHIP | 1uF | 10% | 6.3V |
| C2018 | 1-164-505-11 | CERAMIC CHIP | 2.2uF | | 16V |
| C2019 | 1-109-994-11 | CERAMIC CHIP | 2.2uF | 10% | 10V |
| C2020 | 1-164-505-11 | CERAMIC CHIP | 2.2uF | | 16V |
| | | < CONNECTOR > | | | |
| CN2001 | 1-764-526-11 | CONNECTOR, FFC/FPC 18P | | | |
| CN2002 | 1-750-630-11 | CONNECTOR, FFC/FPC (ZIF) 16P | | | |
| | | < DIODE > | | | |
| D2001 | 8-719-084-47 | DIODE 1SV290(TPL3) | | | |
| | | < FERRITE BEAD > | | | |
| FB2001 | 1-414-760-21 | FERRITE | 0UH | | |
| FB2002 | 1-414-760-21 | FERRITE | 0UH | | |
| | | < IC > | | | |
| IC2001 | 8-759-660-93 | IC RB5P004AM1 | | | |
| IC2002 | 8-752-405-57 | IC CXD3501AR-T4 | | | |
| | | < COIL > | | | |
| L2001 | 1-469-525-91 | INDUCTOR | 10uH | | |
| L2002 | 1-412-949-21 | INDUCTOR | 6.8uH | | |
| | | < RESISTOR > | | | |
| R2001 | 1-218-985-11 | RES-CHIP | 470K | 5% | 1/16W |
| R2002 | 1-208-931-11 | METAL CHIP | 68K | 0.5% | 1/16W |
| R2003 | 1-218-990-11 | SHORT | 0 | | |
| R2004 | 1-218-967-11 | RES-CHIP | 15K | 5% | 1/16W |
| R2005 | 1-218-958-11 | RES-CHIP | 2.7K | 5% | 1/16W |
| R2006 | 1-218-973-11 | RES-CHIP | 47K | 5% | 1/16W |
| R2007 | 1-218-975-11 | RES-CHIP | 68K | 5% | 1/16W |
| R2008 | 1-218-969-11 | RES-CHIP | 22K | 5% | 1/16W |
| R2009 | 1-218-975-11 | RES-CHIP | 68K | 5% | 1/16W |
| R2010 | 1-218-989-11 | RES-CHIP | 1M | 5% | 1/16W |
| R2011 | 1-218-977-11 | RES-CHIP | 100K | 5% | 1/16W |
| R2012 | 1-208-927-11 | METAL CHIP | 47K | 0.5% | 1/16W |
| R2013 | 1-218-989-11 | METAL CHIP | 1M | 0.5% | 1/16W |
| R2014 | 1-218-977-11 | RES-CHIP | 100K | 5% | 1/16W |
| R2015 | 1-218-990-11 | SHORT | 0 | | |
| | | < COMPOSITION CIRCUIT BLOCK > | | | |
| RB2001 | 1-234-372-21 | RES, NETWORK 100X4 | | (1005) | |
| RB2002 | 1-234-381-21 | RES, NETWORK 100KX4 | | (1005) | |
| RB2003 | 1-234-400-21 | CONDUCTOR, NETWORK | | (2010) | |

| Ref. No. | Part No. | Description | Remarks |
|---|---|---|---|
| | | ACCESSORIES | |
| | | ********** | |
| | 1-467-574-21 | REMOTE COMMANDER (RMT-708) | (TRV107/TRV408) |
| ⚠ | 1-475-599-11 | ADAPTOR, AC (AC-L10A) | (TRV107/TRV108:US,CND,E/TRV308/TRV408:E,HK,JE/TRV608:US,CND,E) |
| ⚠ | 1-475-599-71 | ADAPTOR, AC (AC-L10A) (TRV408:KR) | |
| | 1-569-007-11 | ADAPTOR, CONVERSION 2P | (TRV107:JE/TRV408:JE) |
| | 1-569-008-21 | ADAPTOR, CONVERSION 2P | (TRV107:E,HK/TRV108:E/TRV308:E/TRV408:E,HK/TRV608:E) |
| | 1-757-759-11 | CORD, CONNECTION (USB) 5P | (TRV608:US,CND,E) |
| ⚠ | 1-769-608-11 | CORD, POWER | (TRV107:E/TRV108:E/TRV308:E/TRV408:E/TRV608:E) |
| ⚠ | 1-776-985-11 | CORD, POWER (TRV408:KR) | |
| ⚠ | 1-783-374-11 | CORD, POWER (TRV107:HK/TRV408:HK) | |
| | 1-783-738-11 | CORD, CONNECTION (AV CABLE) (1.5m) | (TRV107/TRV108:US,CND,E/TRV308/TRV408/TRV608:US,CND,E) |
| ⚠ | 1-790-107-22 | CORD, POWER | (TRV108:US,CND/TRV308:US,CND/TRV608:US,CND) |
| ⚠ | 1-790-732-11 | CORD, POWER (TRV107:JE/TRV408:JE) | |
| | 3-072-314-11 | MANUAL, INSTRUCTION (ENGLISH) | (TRV107/TRV108:US,CND,E/TRV308/TRV408:E,HK,JE/TRV608:US,CND,E) |
| | 3-072-314-21 | MANUAL, INSTRUCTION (FRENCH) | (TRV108:CND/TRV308:CND/TRV608:CND) |
| | 3-072-314-31 | MANUAL, INSTRUCTION | (SPANISH/PORTUGUESE) (TRV107:E,JE/TRV108:E/TRV308:E/TRV408:JE:E/TRV608:E) |
| | 3-072-314-41 | MANUAL, INSTRUCTION | (TRADITIONAL CHINESE) (TRV107:E,HK/TRV408:E,HK) |
| | 3-072-314-51 | MANUAL, INSTRUCTION (KOREAN) | (TRV107:JE/TRV408:KR,JE) |
| | 3-072-314-61 | MANUAL, INSTRUCTION (ARABIC) | (TRV107:E/TRV408:E) |
| | 3-072-654-01 | SPVD-008 (I) (CD-ROM USB DRIVER) | (TRV608:US,CND,E) |
| | 3-958-131-01 | LID, BATTERY CASE (FOR RMT-708) | (TRV107/TRV408) |
| | 3-987-015-01 | BELT (S), SHOULDER | (TRV107/TRV108:US,CND,E/TRV308/TRV408/TRV608:US,CND,E) |
| | X-3949-37601 | CAP (N) ASSY, LENS | (TRV107/TRV108:US,CND,E/TRV308/TRV408/TRV608:US,CND,E) |
| | | NP-FM30 BATTERY PACK (NOT SUPPLIED) | |

**Note :**
The components identified by mark ⚠ or dotted line with mark ⚠ are critical for safety.
Replace only with part number specified.

**Note :**
Les composants identifiés par une marque ⚠ sont critiques pour la sécurité.
Ne les remplacer que par une pièce portant le numéro spécifié.

## 〈FOR CAMERA COLOR REPRODUCTION ADJUSTMENT〉

**For CCD TYPE S**

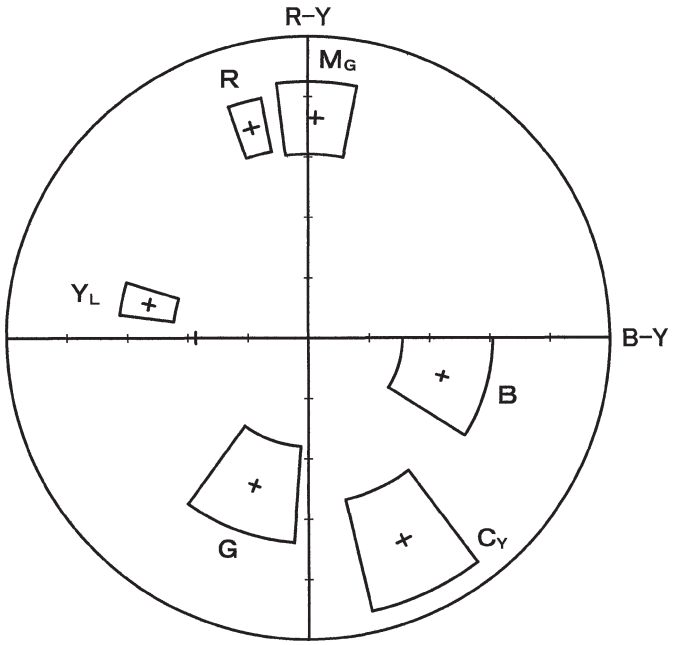


*CCD-TRV107/TRV108/TRV608*

Take a copy of CAMERA COLOR REPRODUCTION FRAME with a clear sheet for use.

**For CCD TYPE M**

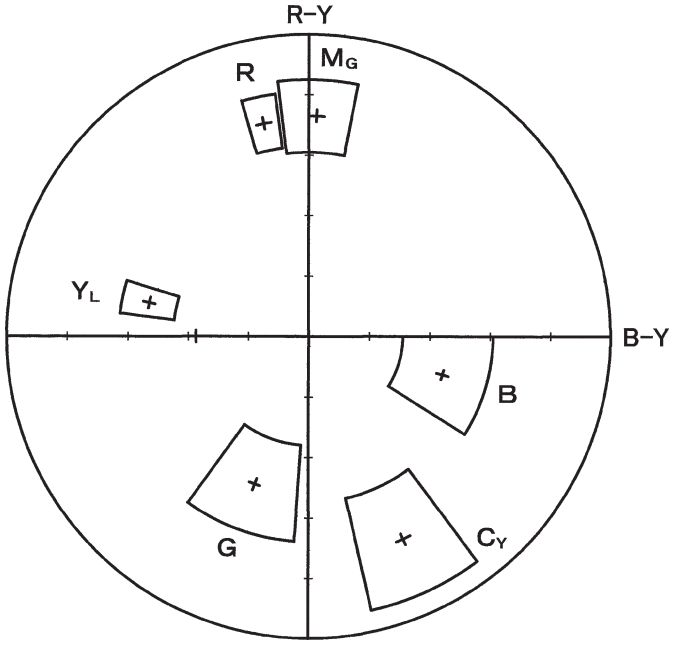


*CCD-TRV308/TRV408*

9-929-926-11

Sony EMCS Co.



2003E1600-1
©2003.5
Published by DI CS Strategy Div.

# CCD-TRV107/TRV108/TRV308/ TRV408/TRV608

## RMT-708

SONY

# SERVICE MANUAL

**Ver 1.3 2003. 05**

*US Model*
*Canadian Model*
*CCD-TRV108/TRV308/TRV608*
*E Model*
*CCD-TRV107/TRV108/TRV308/ TRV408/TRV608*
*Korea Model*
*CCD-TRV408*
*Hong Kong Model*
*Tourist Model*
*CCD-TRV107/TRV408*
*Argentina Model*
*CCD-TRV108/TRV608*
*Brazilian Model*
*CCD-TRV108*

# SUPPLEMENT-1

**File this supplement-1 with the Service Manual.**
**(PV03-003)**

Subject: Change of IC (Version up)

## SECTION 6 REPAIR PARTS LIST

### 6-2. ELECTRICAL PARTS LIST

: Changed portion.

| Page | INCORRECT | | | CORRECT | | |
|---|---|---|---|---|---|---|
| | Ref. No. | Part No. | Description | Ref. No. | Part No. | Description |
| 6-17 | IC271 | 8-752-386-72 | IC CXD2444R-T4 | IC271 | 8-752-417-70 | IC CXD2444AR-T4 |

9-929-926-81

Sony EMCS Co.

2003E1600-1
©2003.5
Published by DI CS Strategy Div.

# Revision History

| Ver. | Date | History | Contents | S.M. Rev. issued |
|---|---|---|---|---|
| 1.0 | 2001.12 | Official Release | — | — |
| 1.1 | 2002.03 | Correction-1<br>(PV01-059) | Error correction<br>S.M. correction: Page 6-1, 6-4 | Yes |
| 1.2 | 2002.07 | Correction-2 | Correct of jig<br>S.M. correction: Page 2-2, 2-3, 2-4, 2-6, 2-7, 2-11, 2-12, 5-4, 5-5, 5-6, 5-21, 5-24, 5-28, 5-29, 5-30, 5-31, 5-40 | Yes |
| 1.3 | 2003.05 | Supplement-1 | Change of IC (Version up) | No |

# 8mm Video MECHANICAL ADJUSTMENT MANUAL IX

Ver 1.0 2000. 12

## M2000 MECHANISM

**Please use this manual with the service manual of the respective models.**

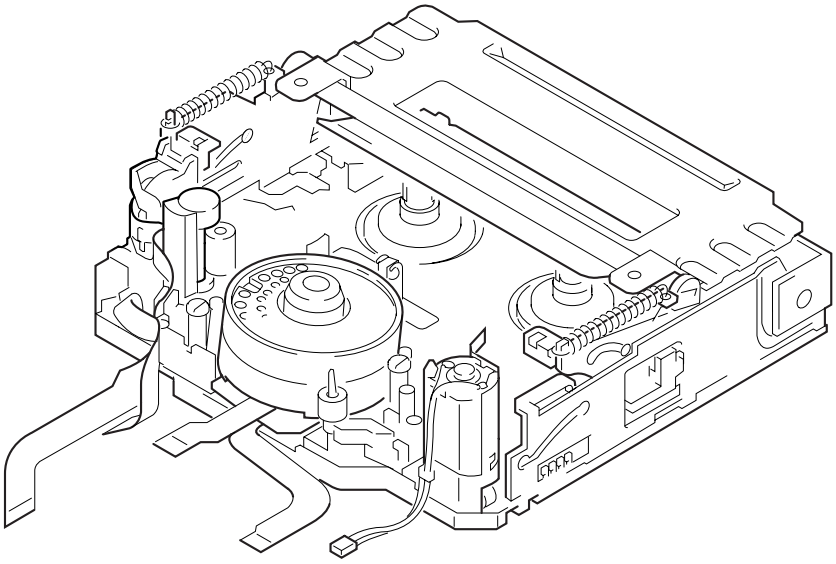

**Digital 8 MECHANISM DECK**

SONY®

## TABLE OF CONTENTS


**1. Preparations for Check, Adjustment and Replacement of Mechanism Block**

1-1. Service Jigs and Tools ····· 3
1-2. Mode Selector II Operating Procedure ····· 5

**2. Periodic Inspection and Maintenance**

2-1. Rotary Drum Cleaning ····· 9
2-2. Tape Path System Cleaning ····· 9
2-3. Periodic Inspection List ····· 10
2-4. Appling Oil and Grease ····· 10

**3. Before Replacement, Check or Adjustment**

3-1. Phase Adjustment ····· 11
3-2. Cassette compartment assembly ····· 12

**4. Check, Adjustment and Replacement**

4-1. Drum Assembly ····· 14
4-2. HCL Arm Assembly, Loading Motor Assembly ····· 15
4-3. Drum Base Assembly, Drum Earth ····· 16
4-4. Guide Rail T2, Capstan Motor ····· 17
4-5. Blind Plate, Lock Guide ····· 18
4-6. Reel Table (T) Assembly, T Soft Assembly ····· 19
4-7. S Ratchet RE Plate, Cassette Guide S ····· 20
4-8. R Drive Gear Assembly, LS Cam Plate ····· 21
4-9. LS Cam Plate Position Adjustment ····· 22
4-10. LS Chassis Block Assembly ····· 23
4-11. TG7 Arm Block Assembly, Pinch Arm Assembly ····· 24
4-12. Guide Base (T) Block Assembly,
Guide Base (S) Block Assembly ····· 25
4-13. TG1 Arm, Reel Table (S) Assembly, Push Switch (3Key) · 26
4-14. Hall Element (H001, H002 (T/S Reel)),
Photo Transistor (Q001, Q002 (Tape Top/Tape End)),
LED (D001 (Tape LED)) ····· 27
4-15. LS Guide Roller, Guide Lock Plate (T),
Pinch Pusher Assembly, Eject Arm ····· 28
4-16. Rotary Switch, Cam Relay Gear,
Change Gear Assembly, Timing Belt ····· 29
4-17. Guide Gear Assembly, Guide Gear T Assembly,
Cam Relay Gear 1, Guide Lock Plate (S) ····· 30
4-18. LD Gear 4, Cam Gear 1, HC Drive Arm ····· 31
4-19. M Slide Plate Assembly, LS Arm Assembly,
Cam Gear 2, GL Arm Assembly ····· 32

**5. Adjustment**

5-1. Check and Adjustment of TG1 Back-tension Position ····· 33
5-2. Check and Adjustment of FWD/RVS Back-tension ····· 34
5-3. Capstan Motor Azimuth Position Adjustment ····· 35
5-4. Tape Path Adjustment ····· 36

**6. Exploded Views**

6-1. Cassette Compartment Assy, Drum Assy ····· 40
6-2. LS Chassis Block Assembly ····· 41
6-3. Mechanical Chassis Block Assembly-1 ····· 42
6-4. Mechanical Chassis Block Assembly-2 ····· 43

**7. Printed Wiring Boards and Schematic Diagrams** ····· 44

# 1. Preparations for Check, Adjustment and Replacement of Mechanism Block

**Before Replacement, Check or Adjustment**

- Refer to the “DISASSEMBLY” section of the SERVICE MANUAL of the respective models for details of removing cabinets and printed wiring boards.
- When checking a mechanism ir making any adjustment to the mechanism or replacing mechanical parts, be sure to use the Mode Selector II and select the appropriate status of the mechanical deck such that the mechanical status is suitable for the desired work. Refer to section “1-2. Mode Selector II Operating Procedure” for details on how to enter the mode shown in a rectangle ____ mode in the sequent sections of this manual.

* Assemble and adjust the parts in the USE mode if any mode is not specified in this manual.

## 1-1. Service Jigs and Tools

| Ref. No. | Name | | Part code | Jig inscription | Used for |
|---|---|---|---|---|---|
| J-1 | Cleaning fluid | | Y-2031-001-0 | | |
| J-2 | Wiping cloth | | 7-741-900-53 | | |
| J-3 | Super-fine applicator<br>(made by Nippon Applicator (P752D)) | | | | |
| J-4 | Head eraser | | commercially available | | Tape path |
| J-5 | Mirror (small oval type) | | J-6080-840-A | GD-2038 | Tape path |
| J-6 | Alignment tape | NTSC : WR5-1NP | 8-967-995-02 | | For tracking adjustment |
| | | PAL : WR5-1CP | 8-967-995-07 | | |
| J-7 | FWD/RVS take-up torque cassette | | J-6080-824-A | GD-2086 | |
| J-8 | Tape path screwdriver | | J-6082-026-A | | For tape guide adjustment |
| J-9 | Adjustment remote commander (RM-95 upgrated) | | J-6082-053-B | | Tape path (for setting the path mode)(Note) |
| J-10 | MD process table | | J-6082-166-A | | |
| J-11 | Floil grease | | 7-662-001-39 | | |
| J-12 | Torque screwdriver | | J-9049-330-A | | |
| J-13 | Mode Selector II | | J-6082-282-B | | |
| J-14 | Mode Selector II conversion board | | J-6082-516-A | | |
| J-15 | Mode Selector II ROM, Ver 1.6 | | J-6082-314-E | | |
| J-16 | Thickness gauge | | 9-911-053-00 | | For capstan azimuth adjustment,<br>LS cam plate position adjustment |

**Other required equipment:**

- Oscilloscope
- Analog tester (20 kΩ)

**Note:** If the micro processor IC in the adjustment remote commander is not the new micro processor (UPD7503G-C56-12), the pages cannot be switched. In this case, replace with the new micro processor (8-759-148-35).

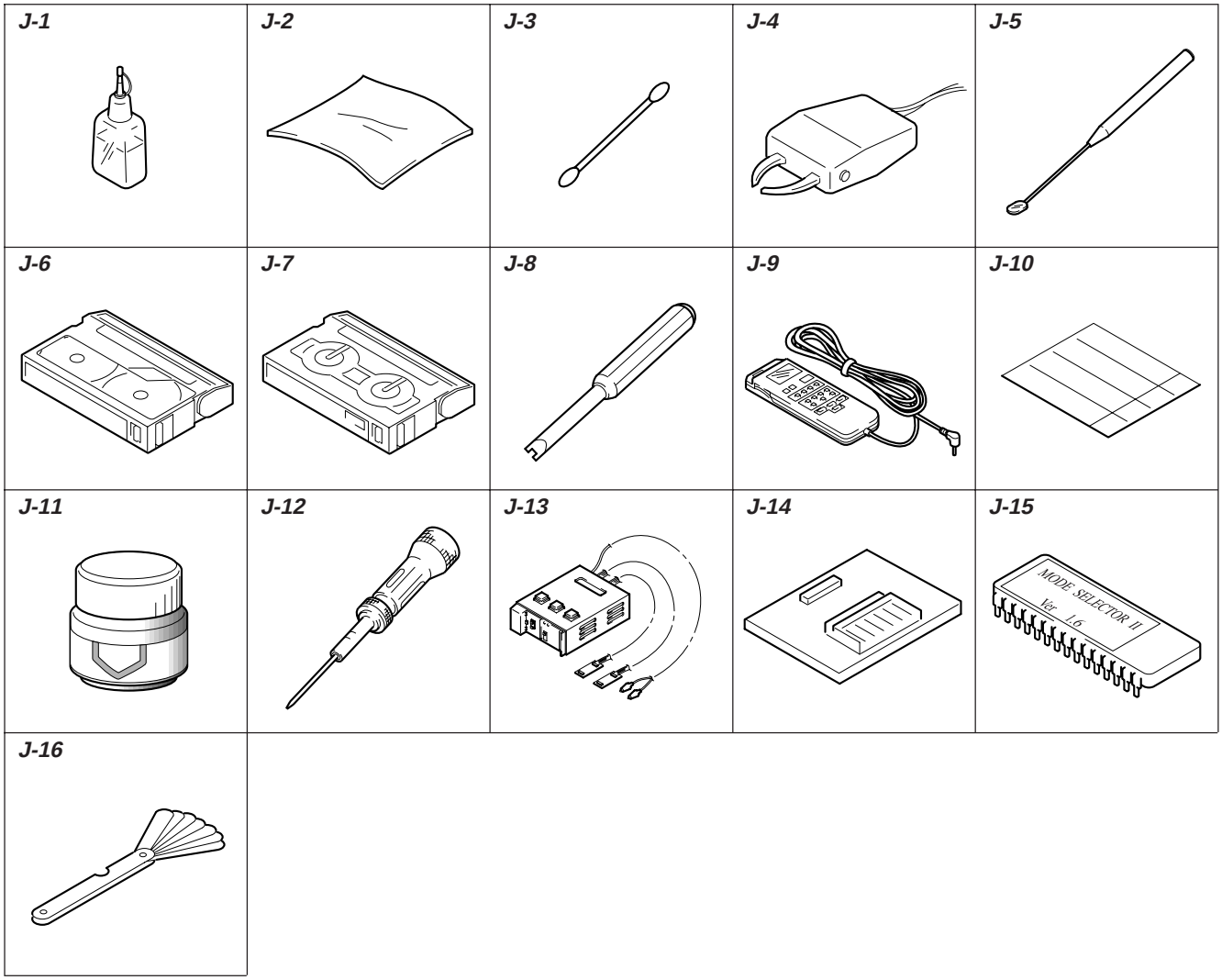
J-1
J-2
J-3
J-4
J-5
J-6
J-7
J-8
J-9
J-10
J-11
J-12
J-13
J-14
J-15
MODE SELECTOR II
Ver 1.6
J-16

*Fig. 1-1.*

## 1-2. Mode Selector II Operating Procedure

### 1-2-1. Introduction

The Mode Selector II is a mechanism drive tool that assists maintenance work of the various mechanism decks. It has the following functions.

**1. Manual Test**

In this mode, the motor of the mechanism deck is powered only during the period while the switch is turned on manually. Using the Manual Test, the operator can freely control the motor of the mechanism deck.

**2. Step Test**

In this mode, the motor of the mechanism deck is kept turned on until the mechanical status is changed from the present mechanical status that is obtained from the sensor information. The Step Test is used to confirm a series of movements of the mechanism deck.

**3. Auto Test**

The Mode Selector II stores the status transition table in its memory as data indicating the respective modes of the mechanism deck. The status transition table can be used to confirm whether a mechanism deck is operating normally or has abnormality from a series of movements of a mechanism deck. If an abnormal status transition is detected during operation, the "NG" indication appears and the mechanism stops moving.

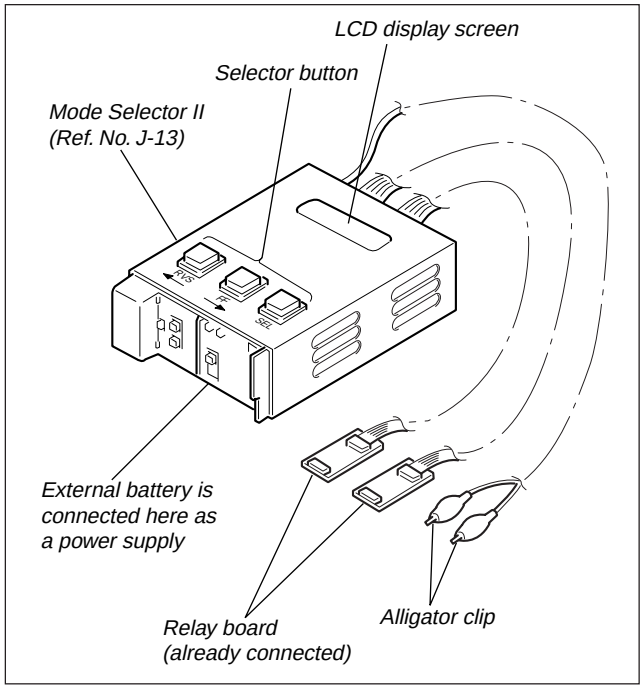


*Fig. 1-2.*

**Mode Selector II (J-6082-282-B) connection diagram**

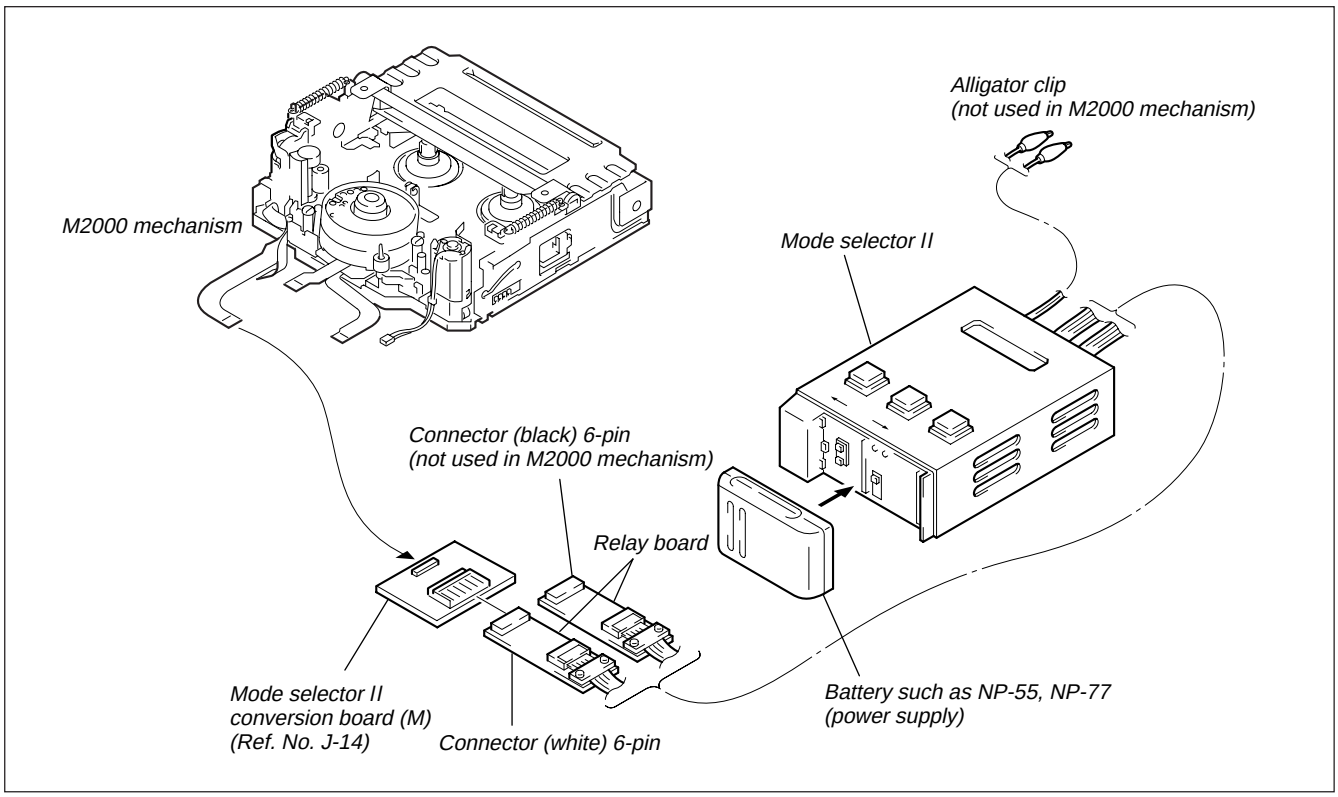


*Fig. 1-3.*

## 1-2-2. Operation

### 1. Operation Flow Chart

**Note:** The ROM in the Mode Selector II supports the M2000 mechanism.

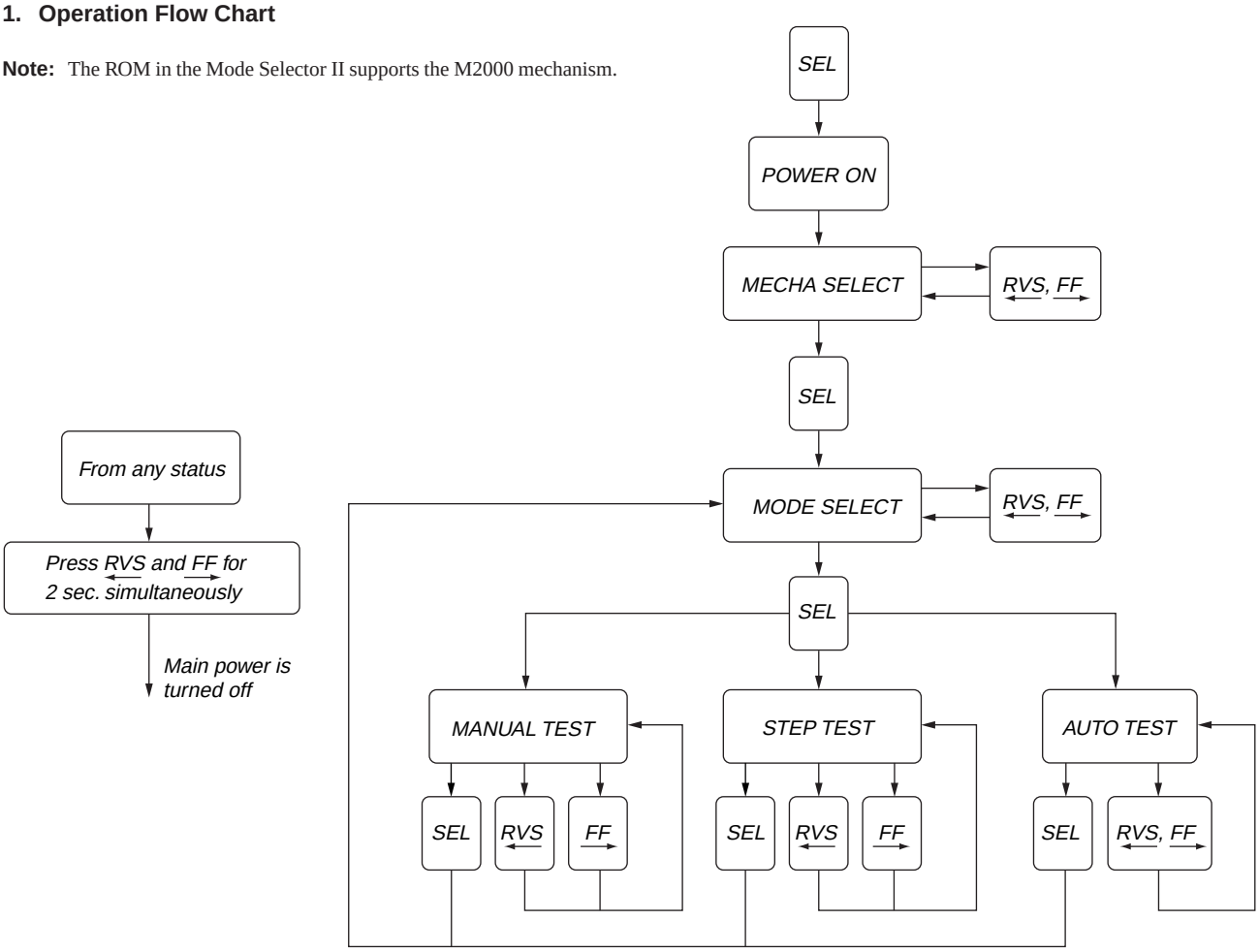


### 2. Mode Selector II Power On

Turn on the main power of the Mode Selector II as follows.
Press the SEL button.

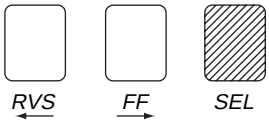


### 3. Mode Selector II Power Off

Turn off the main power of the Mode Selector II as follows.
Press the RVS and FF buttons at the same time for 2 seconds or longer while the power is on.

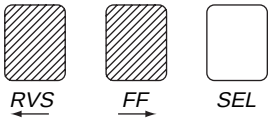

### 4. Mecha Select

When the main power is turned on, the MECHA SELECT display appears on the LCD screen. Select the desired mechanism name using the RVS and FF buttons. Selection is complete when the SEL button is pressed. (Fig. A shows the B mechanism.)

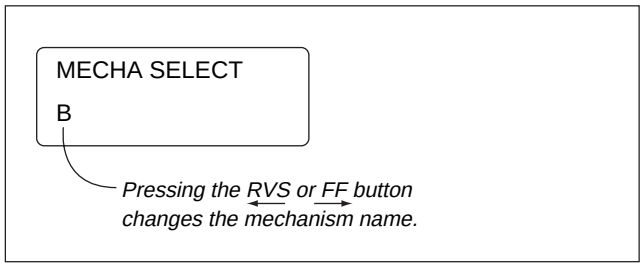


*Fig. a*

### 5. Test Type Select

Using the RVS and FF buttons, select a desired test type from the three types of "MANUAL", "STEP" and "AUTO". Selection is complete when the SEL button is pressed.

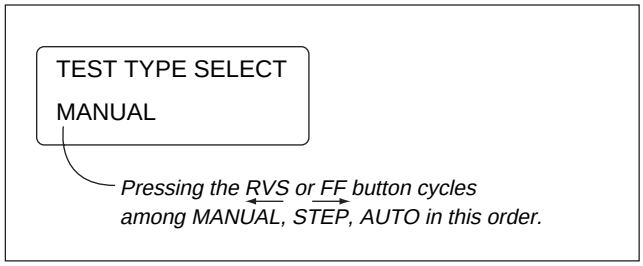


*Fig. b*

### 6. Manual Test

In this test, the motor of the mechanism deck is turned on only during the period while the RVS or FF button is pressed manually.

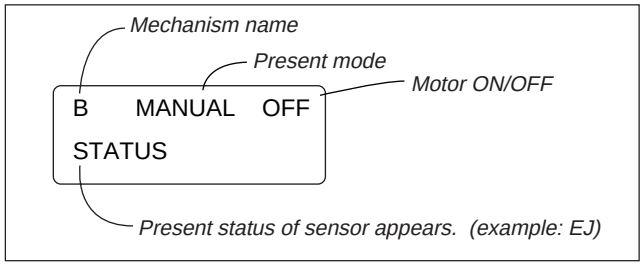


*Fig. c*

### 7. Step Test

In this test, the direction of motor movement is determined by the RVS and FF buttons. The motor of the mechanism deck is kept turned on until the mechanical status is changed from the present mechanical status that is obtained from the sensor information.

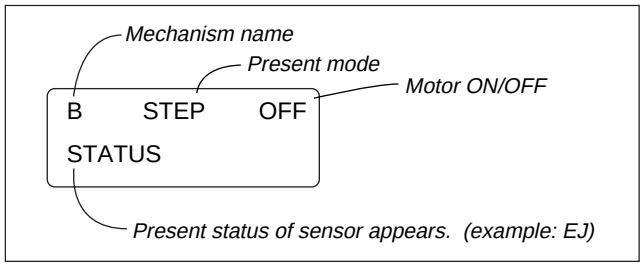


*Fig. d*

### 8. Auto Test

In this test, the mechanism deck is tested as to whether it performs a series of movements correctly in accordance with the operation sequence that is memorized earlier for each type of deck, by checking the output signals from sensors with the stored memory. Turning on the RVS or FF button performs the same operation.

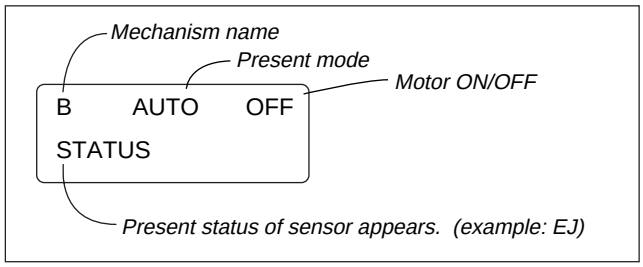


*Fig. e*

### 1-2-3. Mechanism Status (Position) Transition Table Using Mode Selector II

After selecting a mechanism deck, select either the MANUAL or STEP test (not AUTO) using the Mode Selector II. The desired mechanism status (position) can be specified by pressing the RVS or FF button. (The selected status appears on STATUS.)

EJ⟷USE⟷LOAD⟷STOP⟷TURN⟷RP⟷REW

| Code \ MD name | | | | M2000 Mechanism |
|---|---|---|---|---|
| A | B | C | | |
| 1 | 0 | 0 | 1 | EJ |
| 1 | 1 | 0 | 2 | USE |
| 0 | 1 | 0 | 3 | LOAD |
| 0 | 1 | 1 | 4 | STOP |
| 0 | 0 | 1 | 5 | TURN |
| 0 | 0 | 0 | 6 | RP |
| 1 | 0 | 1 | 7 | REW |

[ 0 is common and short.
1 is common and open. ]

### 1-2-4. Battery Alarm Indication

When the level of the battery used to supply power to this system decreases, this display appears asynchronously. When this happens, all operations are disabled and the battery must be replaced.

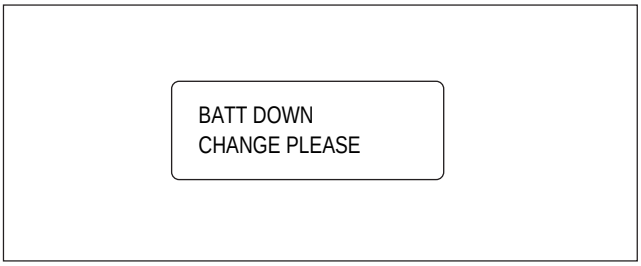


*Fig. f*

# 2. Periodic Inspection and Maintenance

- Be sure to perform the following maintenance and inspection so that the machine delivers its full performance and functions, and to protect the machine and tape. Also, perform the following maintenance items after completing the repair work, regardless of the number of hours the machine has been operated by the user.

## 2-1. Rotary Drum Cleaning

1) Press a wiping cloth (Ref. No. J-2) moistened with cleaning fluid (Ref. No. J-1) lightly against the rotary drum. Rotate the upper drum with a super-fine applicator slowly in the counter-clockwise direction to clean the rotary drum.

**Caution:** Never rotate the rotary drum by turning on the main power of the motor or rotate it in the clockwise direction. Never move the cloth vertically against the head tip, as this will surely damage the video head; the video head must not be cleaned by any other different methods.

## 2-2. Tape Path System Cleaning
### (Refer to Fig. 2-1.)

1) Set the EJECT state. Clean the tape running path (TG1, 2, 3, 4, 5, 6 and 7, pinch roller and capstan shaft) and lower drum with a super-fine applicator (Ref. No. J-3) moistened with cleaning fluid.

**Note 1:** Be careful not to allow oil or grease of the various link mechanisms to get on the super-fine applicator (Ref. No. J-3).
**Note 2:** Once the super-fine applicator has been moistened with alcohol, do not use it to clean other mechanical parts such as the tape guide. However, the pinch roller is cleaned with alcohol.
**Note 3:** When cleaning the capstan shaft, be carefull not to move the oil seal. If the oil seal is moved, oil will leak.

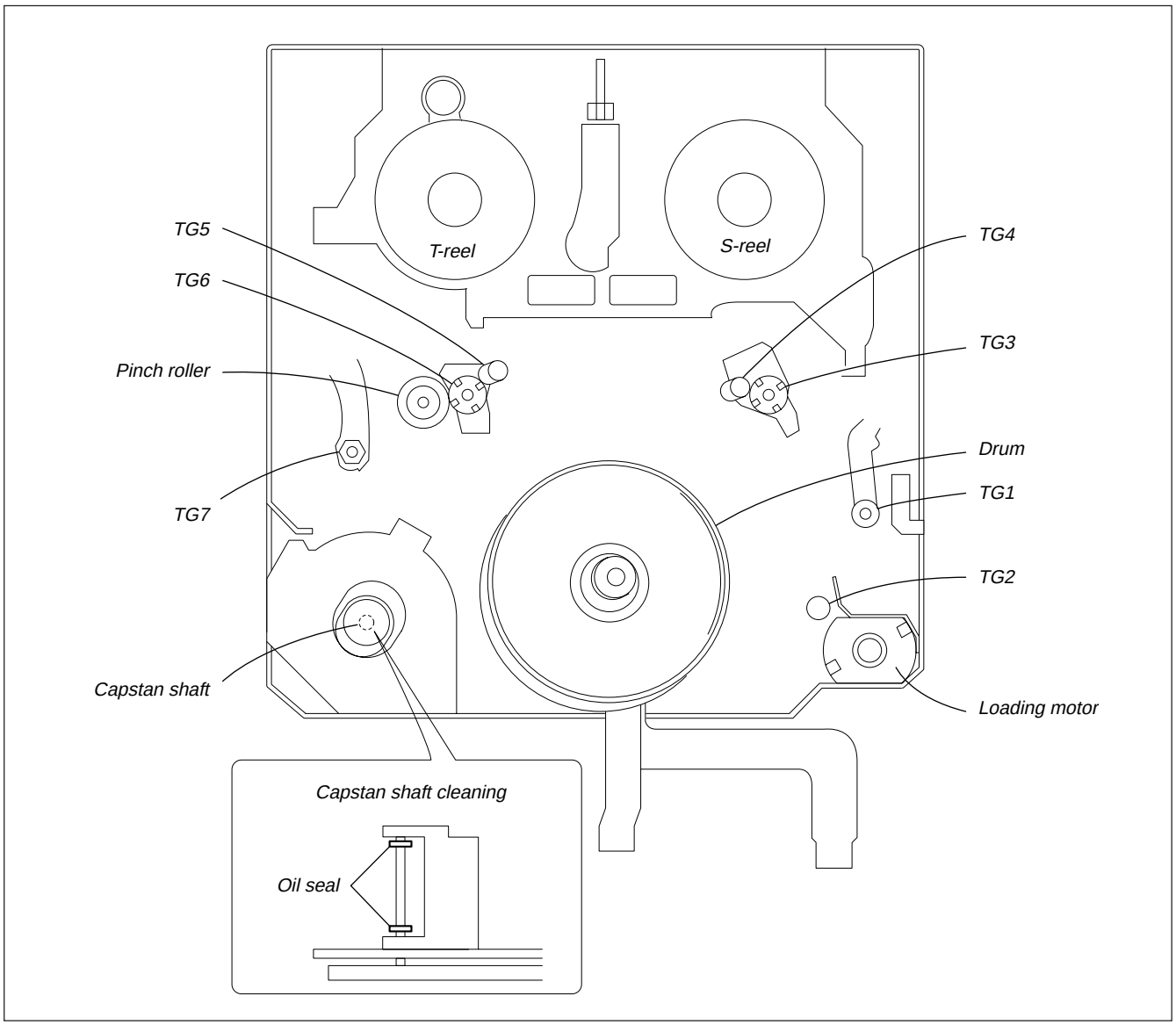


*Fig. 2-1*

## 2-3. Periodic Inspection List

| Maintenance and inspection item | | Operating hours (H) | | | | | | | | | | Remarks |
|---|---|---|---|---|---|---|---|---|---|---|---|---|
| | | 500 | 1000 | 1500 | 2000 | 2500 | 3000 | 3500 | 4000 | 4500 | 5000 | |
| | Tape running surface cleaning | ○ | ○ | ○ | ○ | ○ | ○ | ○ | ○ | ○ | ○ | Be careful not to attach oil |
| | Rotary drum cleaning and degaussing | ○ | ○ | ○ | ○ | ○ | ○ | ○ | ○ | ○ | ○ | Be careful not to attach oil |
| Drive mechanism | Timing belt | — | ☆ | — | ☆ | — | ☆ | — | ☆ | — | ☆ | |
| | Capstan shaft | — | ☆ | — | ☆ | — | ☆ | — | ☆ | — | ☆ | Never attach oil to the tape running path during periodic inspection. |
| | Loading motor | — | ☆ | — | ☆ | — | ☆ | — | ☆ | — | ☆ | |
| Performance check | Abnormal sound | ☆ | ☆ | ☆ | ☆ | ☆ | ☆ | ☆ | ☆ | ☆ | ☆ | |
| | Back-tension measurement | — | ☆ | — | ☆ | — | ☆ | — | ☆ | — | ☆ | |
| | Brake system | — | ☆ | — | ☆ | — | ☆ | — | ☆ | — | ☆ | |
| | FWD/RVS torque measurement | — | ☆ | — | ☆ | — | ☆ | — | ☆ | — | ☆ | |

○: Cleaning, ☆: Check

**Note:** When the machine is overhauled, replace the parts referring to the above list.

## 2-4. Appling Oil and Grease

When replacing or assembling the parts, use oil and grease while referring to the following.

### On Oil

- Be sure to use the specified grease only. (If oil of different viscosity is used, it can cause various troubles.)
  Oil: Part No. 7-661-018-18
  (Mitsubishi diamond oil hydro fluid NT-68)
- The oil used for bearings must not contain any dust or other materials, otherwise excessive abrasion and seizure of the bearing could occur.
- A drop of oil means the amount of oil as shown in the illustration in the right, which is the amount that is attracted to the top of a rod of 2 mm diameter.

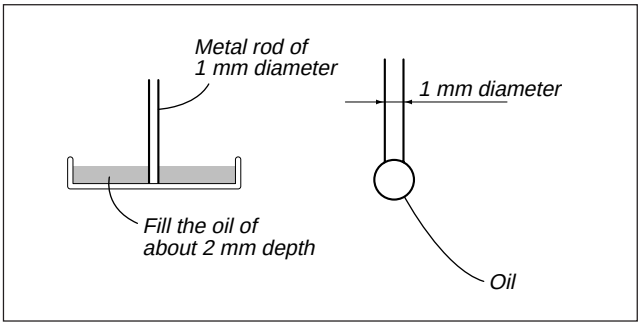


*Fig. 2-2*

### On Grease

- Be sure to use the specified grease only. (If oil of different viscosity is used, it can cause various troubles.)
  Floil grease: Part No. 7-662-001-39
- Be sure to use grease into which dust is not mixed.
- The amount of grease is 1 to 1.5 mm diameter in length.

# 3. Before Replacement, Check or Adjustment

## 3-1. Phase Adjustment

The phase adjustment of this mechanism block has been adjusted by using the in-phase markings shown in the following figure.
When replacing or assembling the parts, check the phase.

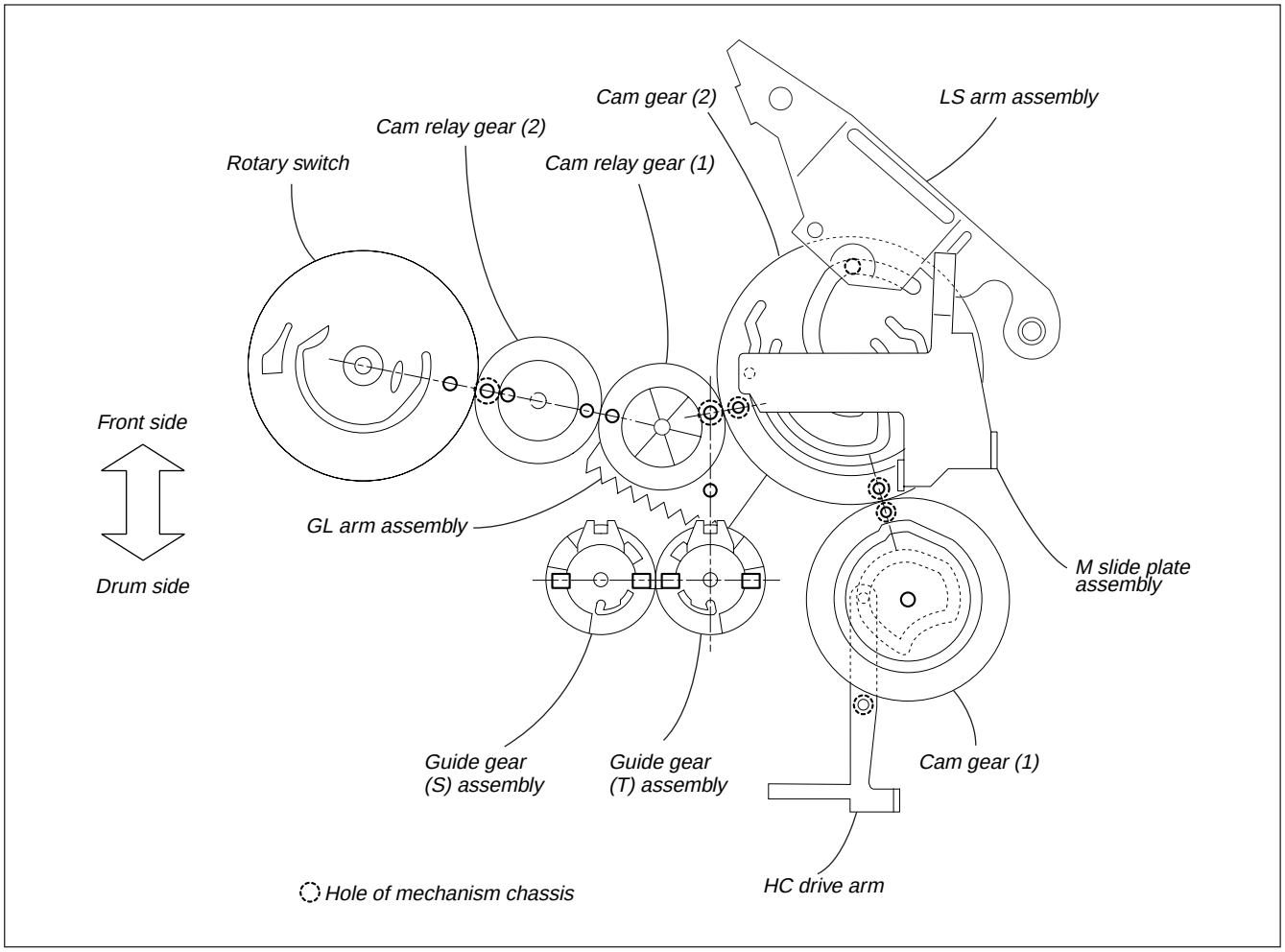


***Fig. 3-1.***

## 3-2. Cassette compartment assembly

### 1. Removal procedure

1) Set the EJ mode to move up the cassette compartment assembly ⑩.
2) Remove the capstan flexible board and flexible wiring board (FP-300) ① from the holders Ⓧ, Ⓨ and Ⓩ in the directions of the arrows Ⓐ, Ⓑ and Ⓒ.
3) Push the damper assembly ③ in the directions of the arrows Ⓓ and Ⓔ and remove it from the notch of the LS chassis block assembly.
4) Remove the two screws (camera pan2 main M1.4 × 1.6) ④.
5) With the cassette compartment assembly ⑩ half opened, move the face plate in the direction of the arrow Ⓕ and remove it from the grooves ⑥ and ⑦ on the LS chassis block assembly.
6) Remove the cassette holder (S) ⑧ and cassette holder (T) ⑨ of the cassette compartment assembly ⑩ from the groove on the LS chassis block assembly.

### 2. Attachment procedure

1) Set the USE mode.
2) Insert the cassette holder (S) ⑧ of the cassette compartment assembly ⑩ and cassette holder (T) ⑨ into the grooves on both sides of the LS chassis block assembly.
3) While moving down the cassette compartment assembly ⑩, lift up the face plate in the direction of the arrow Ⓕ and keep this status. Then, insert the face plate in the grooves ⑥ and ⑦ on the LS chassis block assembly.
4) Tighten the two screws (camera pan2 main M1.4×1.6) ④.
   Tightening torque: 0.078 ± 0.01 N•m (0.8 ± 0.1 kgf•cm)
5) Move the damper arm of the damper assembly ③ to the 4 o'clock position and insert the damper assembly into the hole on the LS chassis block assembly and the dowel of the cassette holder (T) ⑨.
6) Align the damper assembly ③ with the notch of the LS chassis block assembly and rotate the damper assembly ③ in the opposite direction to the arrow Ⓔ to fix it.

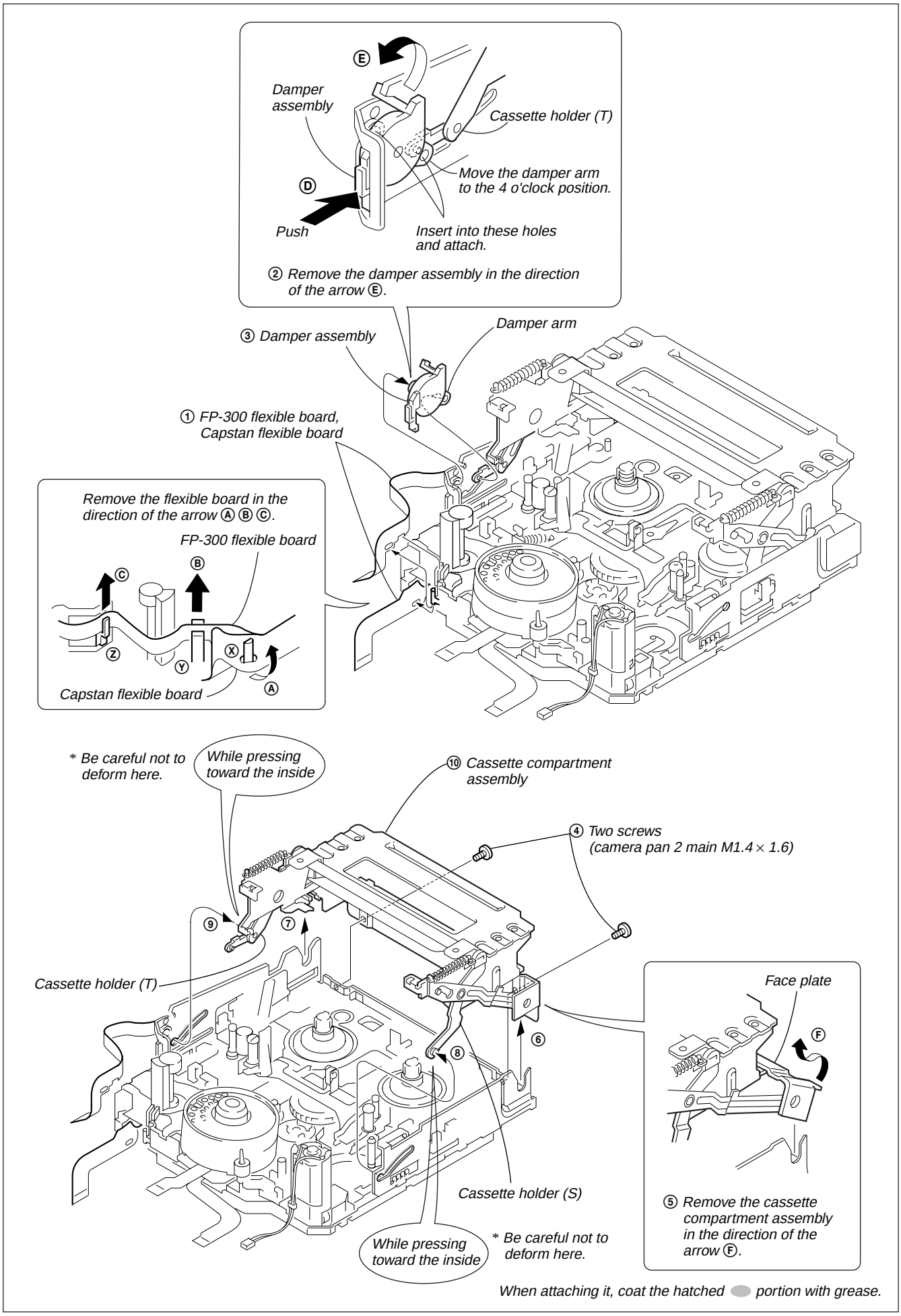
Ⓔ
Damper assembly
Cassette holder (T)
Move the damper arm to the 4 o'clock position.
Ⓓ
Push
Insert into these holes and attach.
② Remove the damper assembly in the direction of the arrow Ⓔ.
③ Damper assembly
Damper arm
① FP-300 flexible board, Capstan flexible board
Remove the flexible board in the direction of the arrow Ⓐ Ⓑ Ⓒ.
FP-300 flexible board
Ⓒ
Ⓑ
Ⓩ
Ⓨ
Ⓧ
Ⓐ
Capstan flexible board
* Be careful not to deform here.
While pressing toward the inside
⑩ Cassette compartment assembly
④ Two screws (camera pan 2 main M1.4 × 1.6)
⑨
⑦
Cassette holder (T)
Face plate
Ⓕ
⑥
⑧
Cassette holder (S)
While pressing toward the inside
* Be careful not to deform here.
⑤ Remove the cassette compartment assembly in the direction of the arrow Ⓕ.
When attaching it, coat the hatched portion with grease.

**Fig. 3-2.**

# 4. Check, Adjustment and Replacement

**Note:** For removal procedure of the cabinets, printed wiring boards and other parts, refer to “DISASSEMBLY” of the Service Manual of the respective models.

## 4-1. Drum Assembly

### 1. Removal procedure

1) Remove the three screws (drum fitting M1.4 × 2.5) ① fixing the drum and remove the drum.

### 2. Attachment procedure

1) Align the two reference holes A and B on the rear of the drum with the reference pins A and B of the drum base assembly.
2) Attach the drum with the three screws (drum fitting M1.4 × 2.5) ① in the order of Ⓐ, Ⓑ and Ⓒ.
   Tightening torque: 0.078 ± 0.01 N•m (0.8 ± 0.1 kgf•cm)
3) Clean the drum while referring to 2-1.
4) Adjust the tape path. (Refer to “4. Tape Path Adjustment”.)

**Note:** Do not touch the outside circumference.

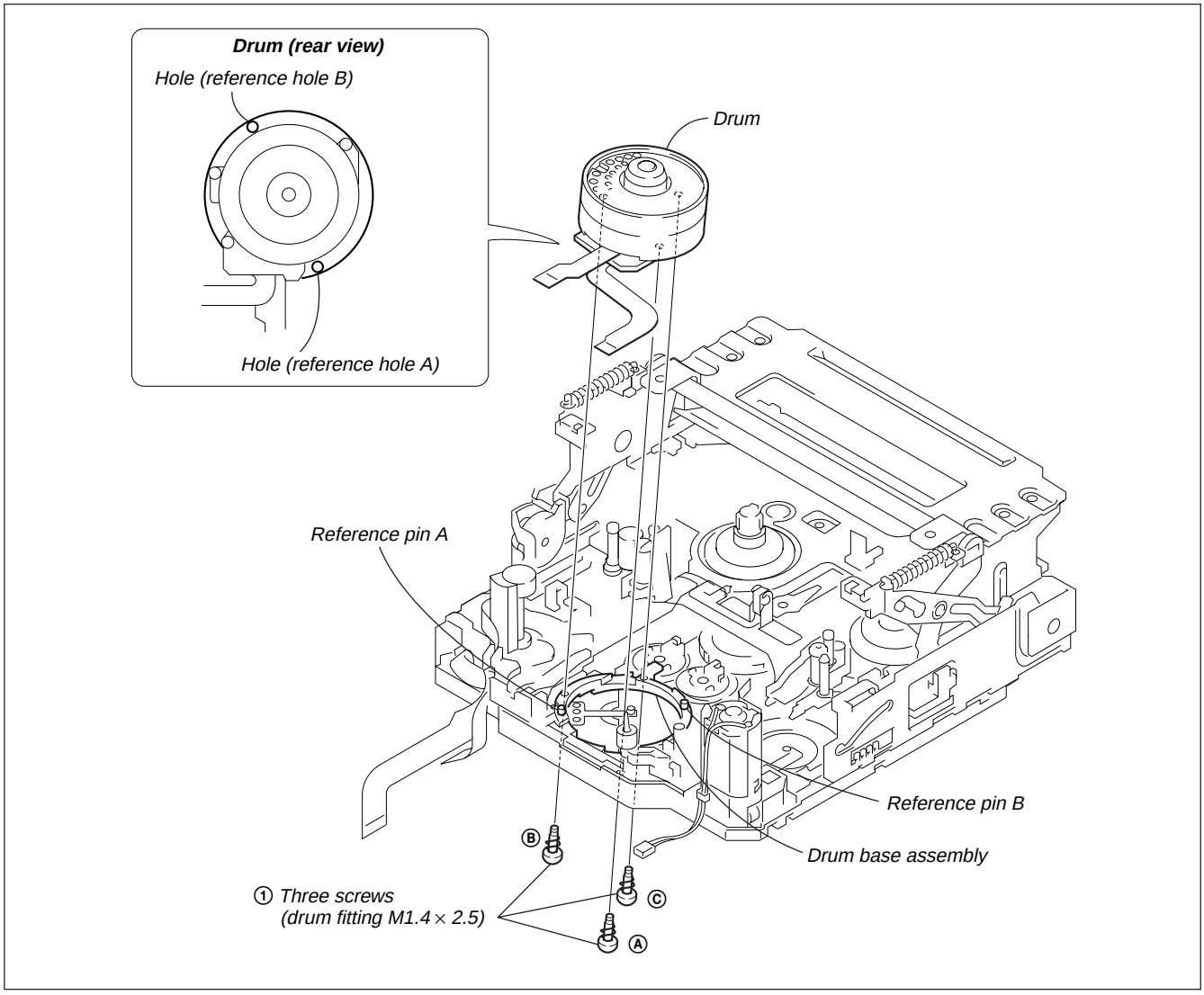


*Fig. 4-1.*

## 4-2. HCL Arm Assembly, Loading Motor Assembly

### 1. Removal procedure

1) Hook the HC arm spring in the direction of the arrow Ⓑ.
2) Remove the HCL arm assembly ② from the loading motor assembly ④.
3) Remove the screw (M1.4 × 2.5) ③.
4) Remove the three claws of the loading motor assembly ④ from the mechanism chassis assembly in the direction of the arrow Ⓐ.

### 2. Attachment procedure

1) Coat the worm shaft and gear of the loading motor assembly ④ with grease.
2) Insert the three claws of the loading motor assembly ④ into the groove on the mechanism chassis assembly.
3) Attach the screw (M1.4 × 2.5) ③.
   Tightening torque: 0.078 ± 0.01 N•m (0.8 ± 0.1 kgf•cm)
4) Check the position of the HCL arm assembly ② and the HC drive arm. Then attach the HCL arm assembly ② to the loading motor assembly ④.
5) Hook the HC arm spring ① on the notch of the loading motor assembly ④.
6) Clean the drum assembly. (Refer to section 2-1.)

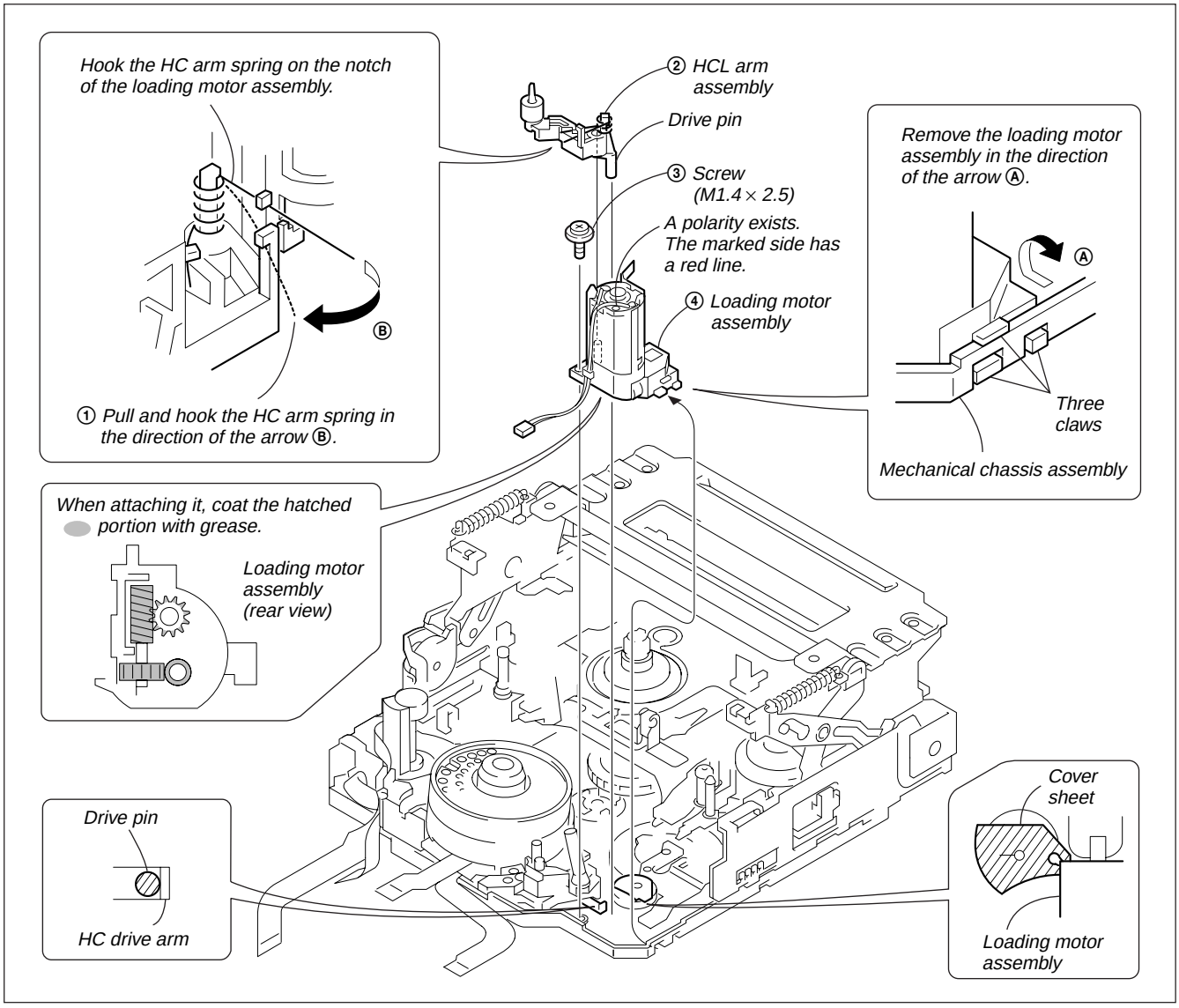


*Fig. 4-2.*

## 4-3. Drum Base Assembly, Drum Earth

### 1. Removal procedure

1) Remove the capstan flexible board and flexible wiring board (FP-300) from the holders Ⓧ, Ⓨ and Ⓩ in the direction of the arrow.
2) Remove the drum assembly. (Refer to section 4-1.)
3) Remove the screw (M1.4 × 2.5) ②.
4) Remove the claw Ⓓ of the guide rail T2 ③ from the hole Ⓔ of the drum base assembly in the direction of the arrow Ⓕ.
5) Remove the three screws (M1.4 × 2.5) ④.
6) Remove the drum base assembly ⑤ in the direction of the arrow.
7) Remove the screw (screw assy PW M1.7 × 2.6) ⑥.
8) Remove the drum earth ⑦ and earth spacer ⑧.

### 2. Attachment procedure

1) Attach the ground spacer ⑧ and drum ground ⑦ with the screw (screw assy PW M1.7 × 2.6) ⑥.
   Tightening torque: 0.078 ± 0.01 N•m (0.8 ± 0.1 kgf•cm)
2) Align the drum base assembly ⑤ with the reference pin and tighten the three screws (M1.4 × 2.5) ④ in the order of Ⓖ, Ⓗ and Ⓘ.
3) Insert the claw Ⓓ of the guide rail T2③ into the hole Ⓔ of the drum base assembly ⑤ and tighten the screw (M1.4 × 2.5) ②.
   Tightening torque: 0.078 ± 0.01 N•m (0.8 kgf•cm)
4) Remove the drum assembly. (Refer to 4-1.)
5) Attach the flexible wiring board (FP-300) ① and capstan flexible board to the drum base assembly.
6) Clean the tape running path. (Refer to 2-2.)

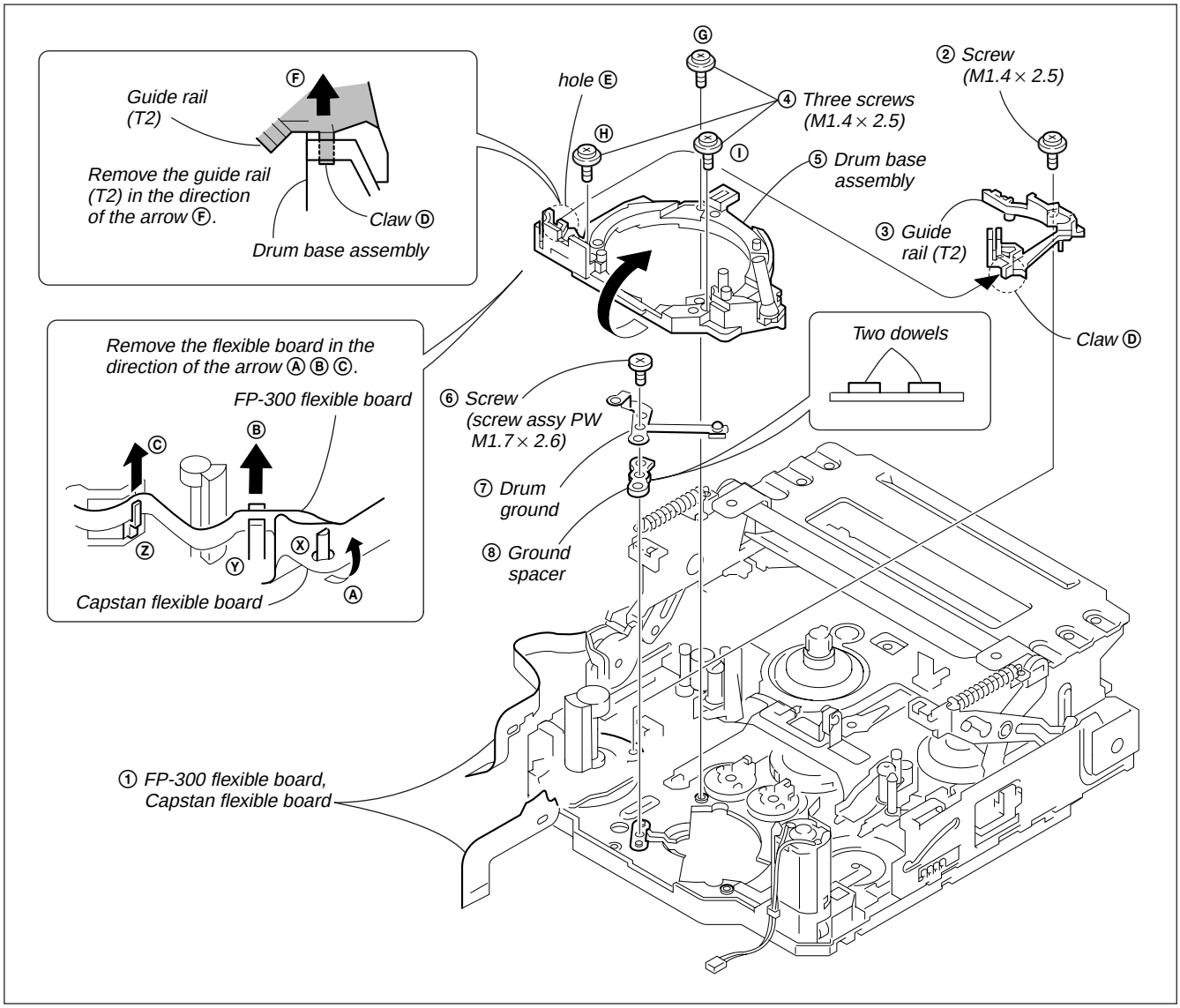


*Fig. 4-3.*

## 4-4. Guide Rail T2, Capstan Motor

### 1. Removal procedure

1) Remove the capstan flexible board and flexible wiring board (FP-300) ① from the holders Ⓧ, Ⓨ and Ⓩ in the directions of the arrows Ⓐ, Ⓑ and Ⓒ.
2) Remove the screw (M1.4 × 2.5) ②.
3) Remove the claw of the guide rail T2 ③ from the hole on the drum base assembly in the direction of the arrow Ⓓ.
4) Remove the six solderings ④.
5) Remove the FP-228 flexible wiring board (2P) (DEW sensor) ⑤.
6) Remove the two screws (camera pan2 main M1.4 × 1.6) ⑥ and the screw (SANG camera pan2 main M1.4 × 4.5) ⑦.
7) Remove the capstan motor ⑧.
8) Remove the capstan spring ⑨ (be careful not to drop the capstan spring) and timing belt ⑩.

### 2. Attachment procedure

1) Hook the timing belt ⑩ on the gear of the capstan motor ⑧, attach the capstan motor while aligning it with the reference boss of the mechanism chassis assembly.
2) Attach the screw (SANG camera pan2 M1.4 × 4.5) ⑦ and capstan spring ⑨. (temporally attachment)
3) Attach the two screws (camera pan2 M1.4 × 1.6) ⑥.
   Tightening torque: 0.078 ± 0.01 N•m (0.8 ± 0.1 kgf•cm)
4) Attach the six solderings ④ to the FP-228 flexible wiring board ⑤ (2P) (DEW sensor) and the FP-299 flexible wiring board (4P).
5) Insert the guide rail T2 ③ into the hole on the drum base assembly and tighten the screw (M1.4 × 2.5) ②.
   Tightening torque: 0.078 ± 0.01 N•m (0.8 ± 0.1 kgf•cm)
6) Attach the capstan flexible board and the flexible wiring board (FP-300) ① to the holders Ⓧ, Ⓨ and Ⓩ.
7) Adjust the height of the capstan motor using the thickness gauge (Ref. No. J-16). (Refer to 5-3.)

**Note:** Be careful not to touch the center of the capstan motor ⑩ shaft and the FP-228 flexible wiring board (DEW sensor) with soldering iron or other tool.

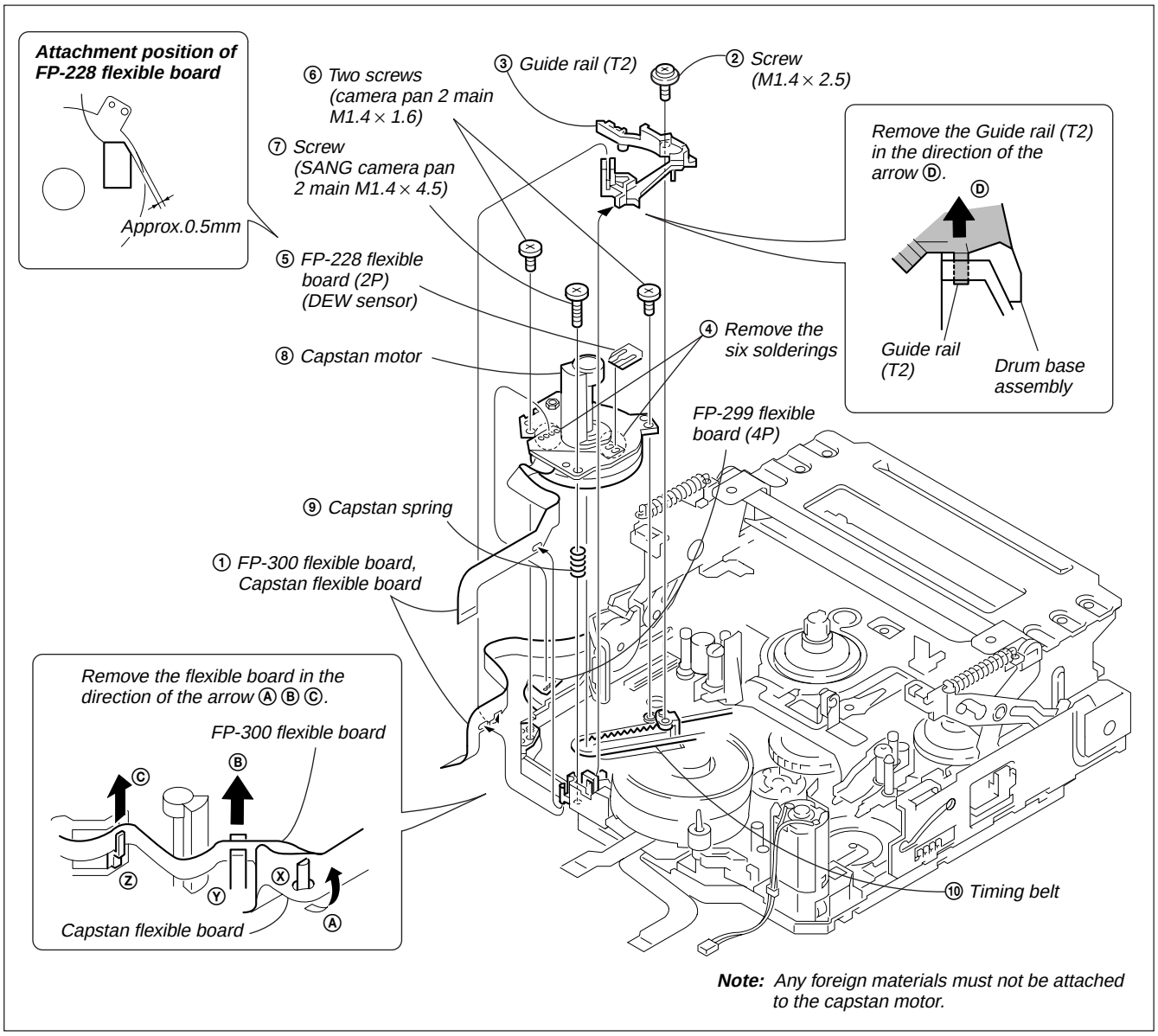


*Fig. 4-4.*

## 4-5. Blind Plate, Lock Guide

### 1. Removal procedure

1) Remove the diode D001 (tape LED) ① from the notch of the plate ④.
2) Remove the flexible wiring board ② (FP-301) from T-shaped portion of the blind plate ④ in the direction of the arrow Ⓐ.
3) Remove the screw (camera pan2 main M1.4 × 1.6) ③.
4) Release the hook on the notches Ⓖ, Ⓓ, Ⓔ and Ⓕ of the blind plate ④ in the direction of the arrow Ⓑ.
5) Remove the reel release lever ⑤ in the direction of the arrow Ⓒ.

### 2. Attachment procedure

1) Attach the reel release lever ⑤ to the blind plate ④.
2) Hang the notches Ⓖ, Ⓓ, Ⓔ and Ⓕ of the blind plate ④ on the hook.
3) Attach the screw (camera pan2 main M1.4 × 1.6) ③.
   Tightening torque: 0.078 ± 0.01 N•m (0.8 ± 0.1 kgf•cm)
4) Attach the flexible wiring board (FP-301) ② to the T-shaped portion of the blind plate ④.
5) Attach the diode (tape LED) ① to the notch of the blind plate ④.

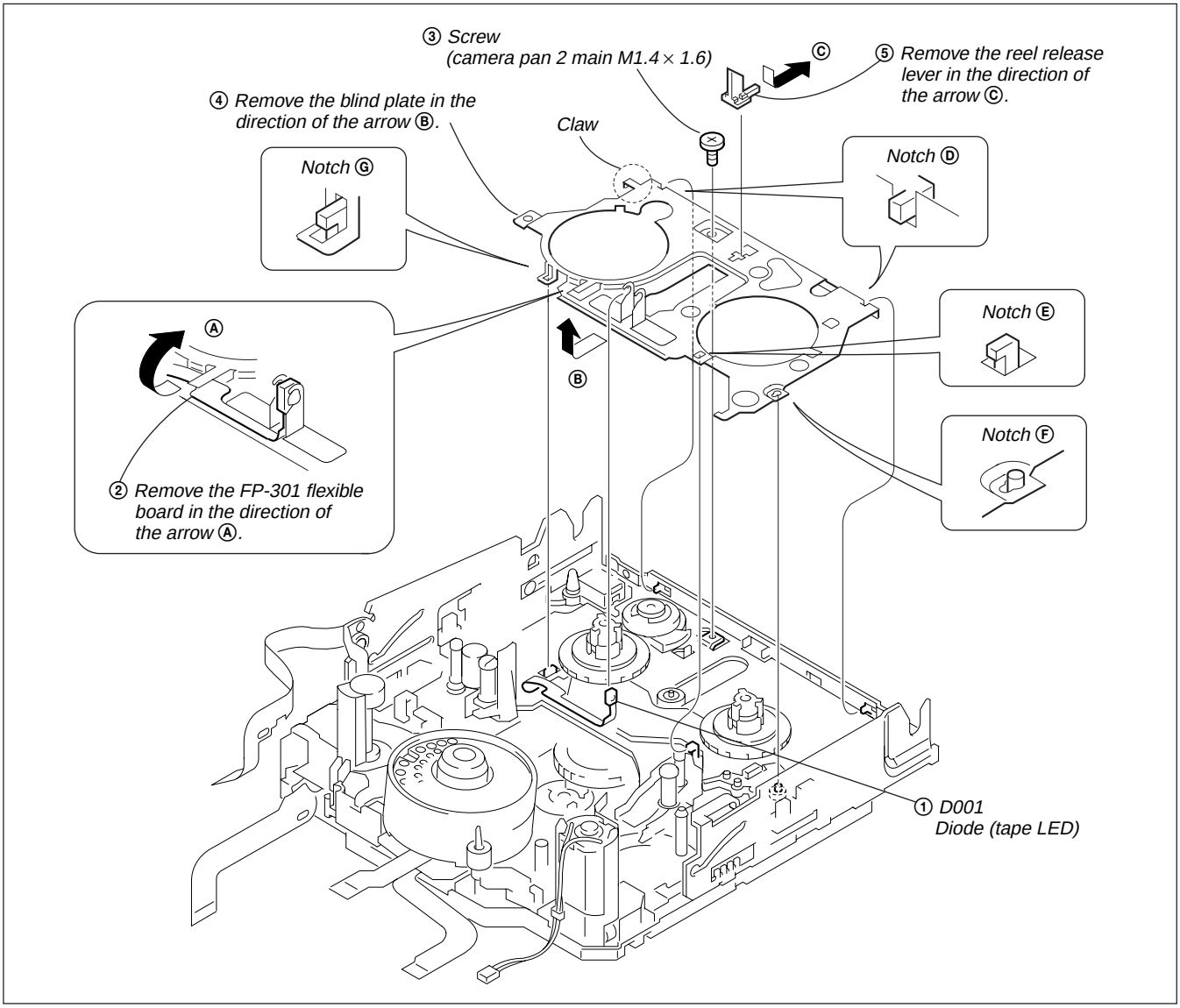


*Fig. 4-5.*

## 4-6. Reel Table (T) Assembly, T Soft Assembly

### 1. Removal procedure

1) Remove the blind plate. (Refer to 4-5.)
2) Open the claw of the reel table T assembly ① in the directions of the arrows Ⓑ and Ⓒ and remove the reel table T assembly.
3) Remove the T soft assembly ② in the direction of the arrow Ⓐ.
4) Remove the T ratchet spring ③.
5) Remove the T ratchet arm ④ in the direction of the arrow Ⓓ.

### 2. Attachment procedure

1) Insert the T ratchet arm ④ into the groove on the LS chassis block assembly to attach it.
2) Attach the T ratchet spring ③ to the notch of the T ratchet arm ④ and LS chassis block assembly.
3) Insert the T soft assembly into the groove on the LS chassis block assembly.
4) Check the location of the reel table T assembly and attach the LS chassis block assembly to the shaft.
5) Attach the blind plate. (Refer to 4-5.)

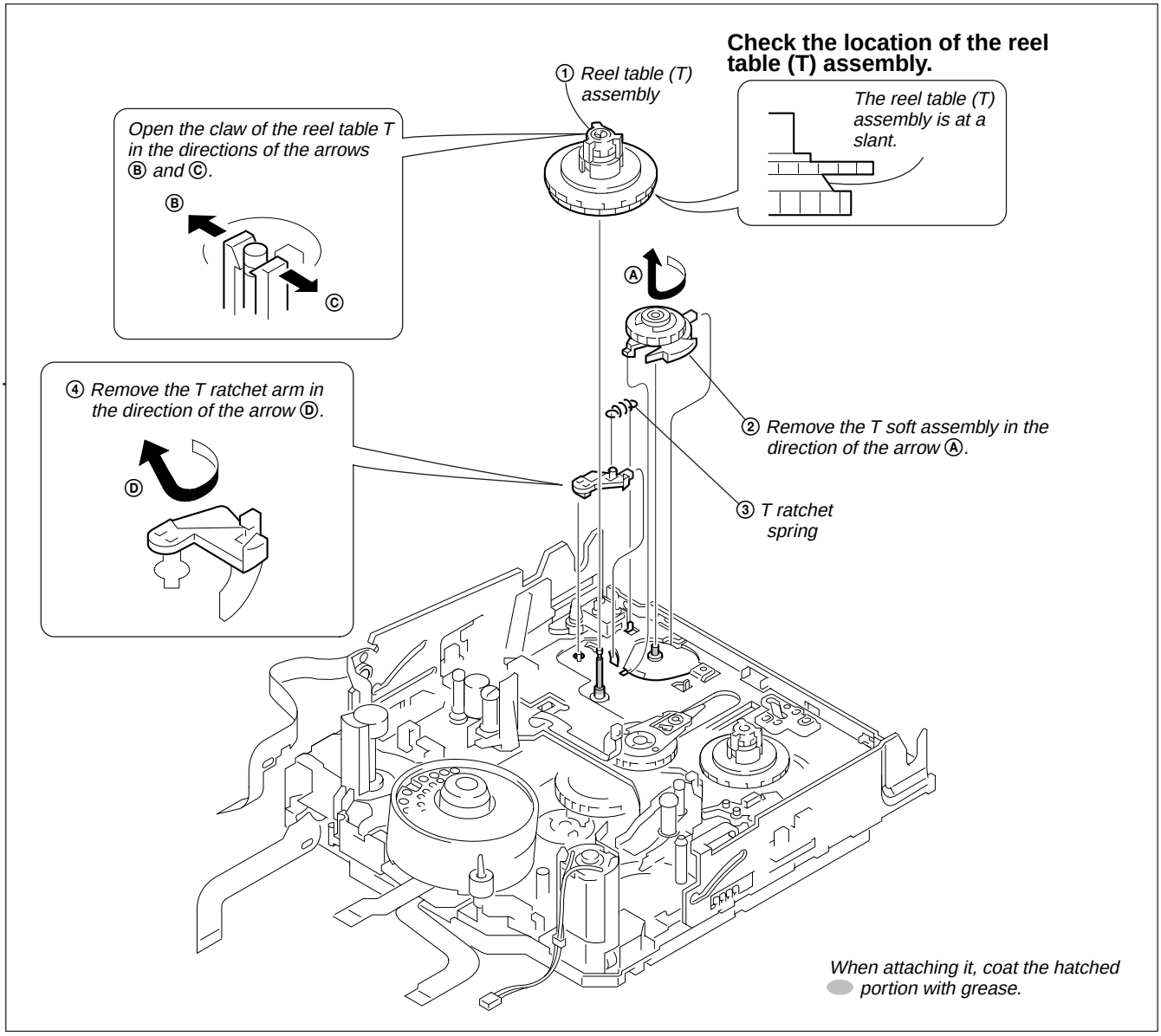


*Fig. 4-6.*

## 4-7. S Ratchet RE Plate, Cassette Guide S

### 1. Removal procedure

1) Remove the blind plate. (Refer to 4-5.)
2) Remove the RE return plate spring ①.
3) Remove the S ratchet spring ②.
4) Remove the S ratchet arm ③ in the direction of the arrow Ⓐ.
   **Note:** Do not reuse the S ratchet arm.
5) Remove the S ratchet RE plate.
6) Remove the screw (camera tapping M1.4 × 2)⑤.
7) Remove the cassette guide S ⑥ in the direction of the arrow Ⓑ.

### 2. Attachment procedure

1) Attach the cassette guide S ⑥ to the notch of the LS chassis block assembly with the screw (camera tapping M1.4 × 2).
2) Attach the S ratchet RE plate ④ to the shaft of the LS chassis block assembly.
3) Attach the S ratchet arm ③ to the shaft of the LS chassis block assembly. At this time, the dowel of the S ratchet RE plate ④ must be inserted into the U-shaped notch of the S ratchet arm ③.
4) Hook the S ratchet spring ② on the notch of the S ratchet arm and attach it to the notch of the LS chassis block assembly.
5) Attach the RE return plate spring ① to the notch of the LS chassis block assembly.
6) Attach the blind plate. (Refer to 4-5.)

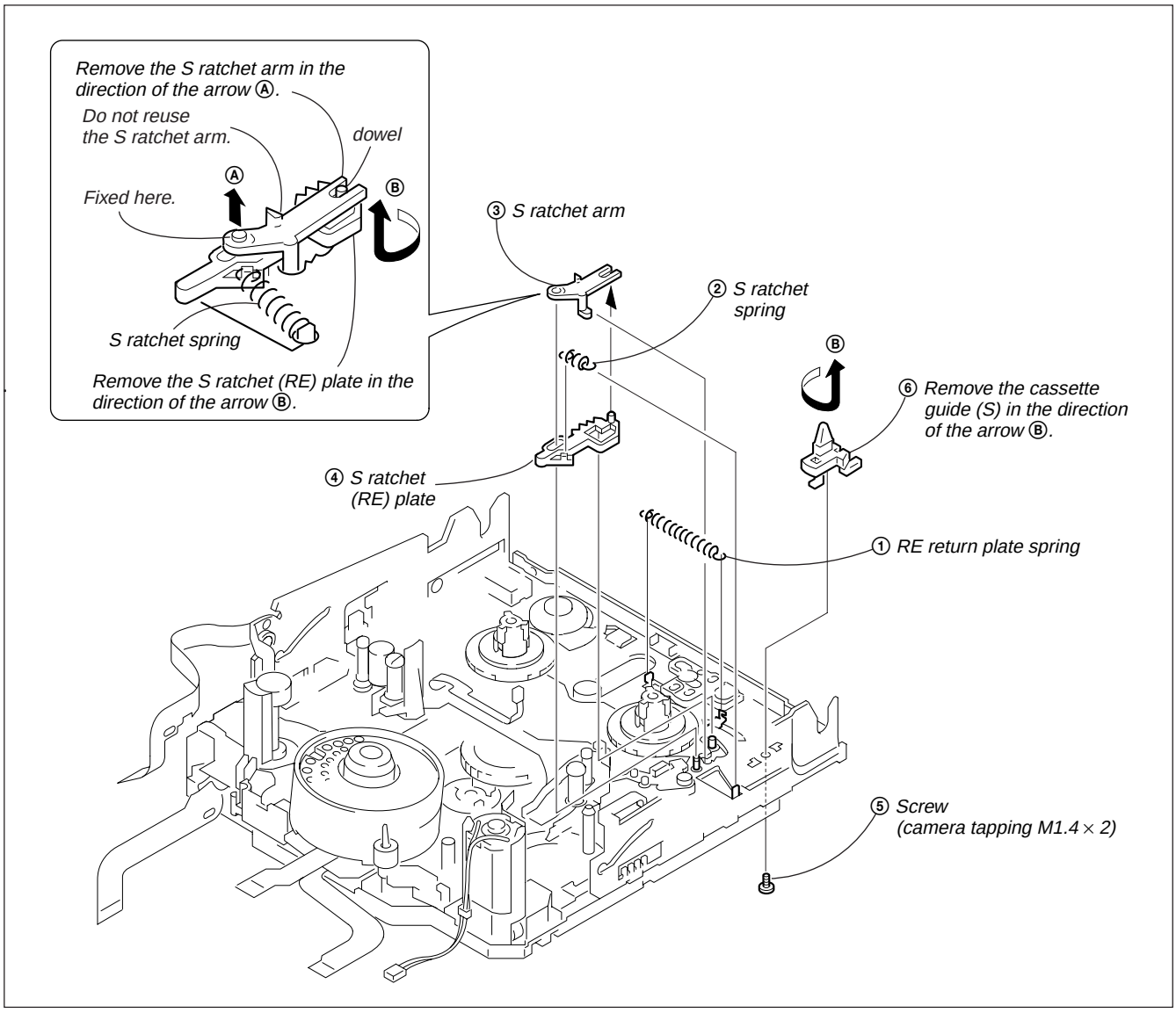


*Fig. 4-7.*

## 4-8. R Drive Gear Assembly, LS Cam Plate

### 1. Removal procedure

1) Remove the blind plate. (Refer to 4-5.)
2) Remove the lumiler cut washer (0.98 × 3 × 0.13) ①.
3) Remove the R drive gear assembly ②.
4) Remove the HLC cut (1.8 × 4 × 0.5) ③ and the two screws (precision type3 +P1.7 × 1.8) ④.
5) Remove the LS cam plate ⑤.

### 2. Attachment procedure

1) Attach the R drive gear assembly ② with the lumiler cut washer (0.98 × 3 × 0.13) ①.
2) Align the LS cam plate ⑤ with the two dowels of the LS chassis block assembly, temporarily fix the LS cam plate ⑤ with the two screws (precision type3 +P1.7 × 1.8), then attach it with the HLC cut (1.8 × 4 × 0.5) ③.
3) Adjust the position of the LS cam plate. (Refer to 4-9.)

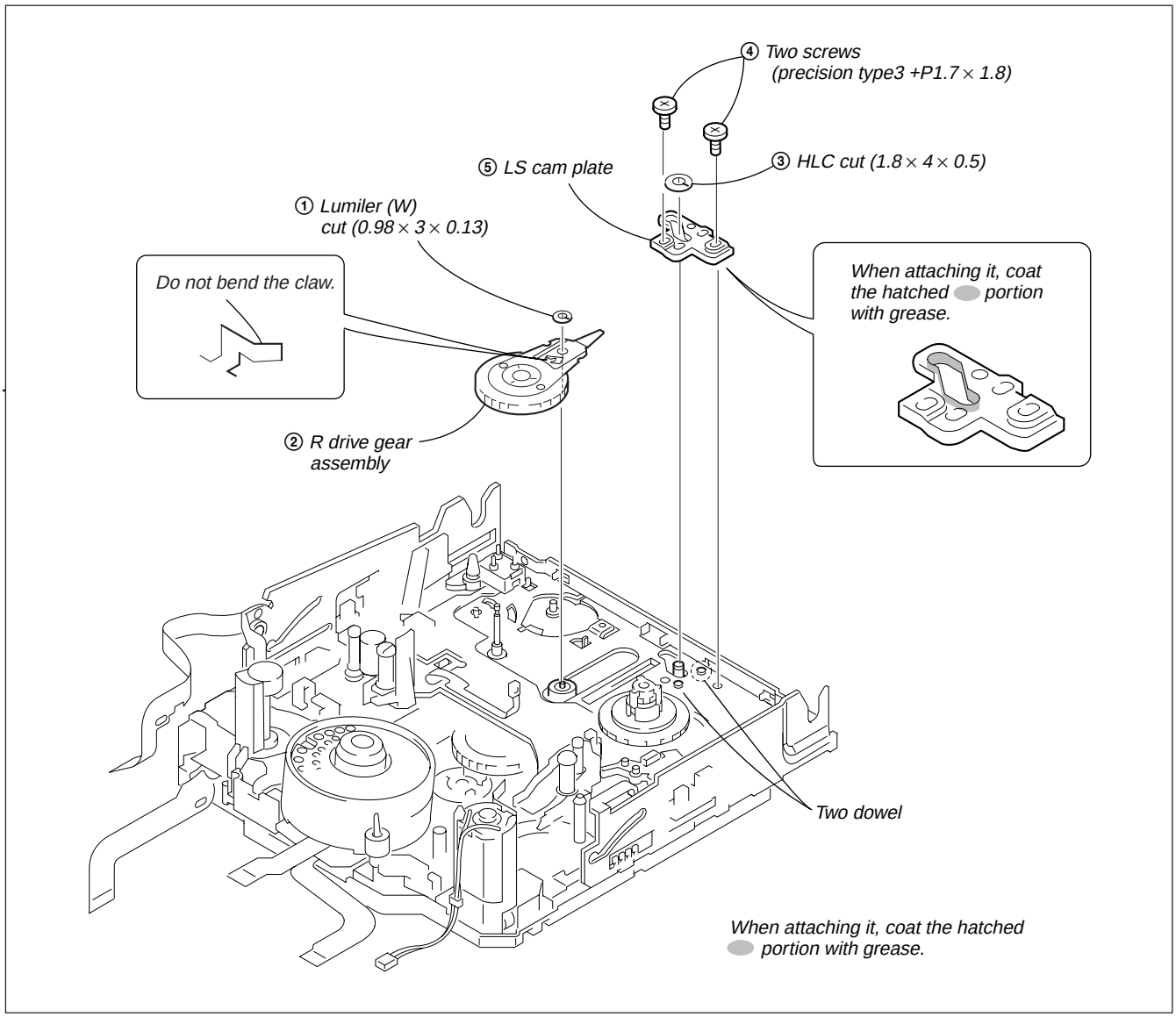


*Fig. 4-8.*

## 4-9. LS Cam Plate Position Adjustment

### 1. Adjustment Procedure

1) Perform loading of the LS chassis block assembly ① until the tip of the guide base (S) assembly reaches the drum base assembly.
2) Loosen the two screws (precision type3 +P1.7 × 1.8) ② of the LS cam plate and slide the LS chassis block assembly to the drum side so as to remove play.
3) Insert the thickness gauge 0.6 mm (Ref. No. J-16) between the LS cam plate and the LS chassis block assembly. Push the LS cam plate in the direction opposite to the drum to remove play.
4) Fix the two screws (precision type3 +P1.7 × 1.8) ②.
   Tightening torque: 0.108 ± 0.01 N•m (1.1 kgf•cm)

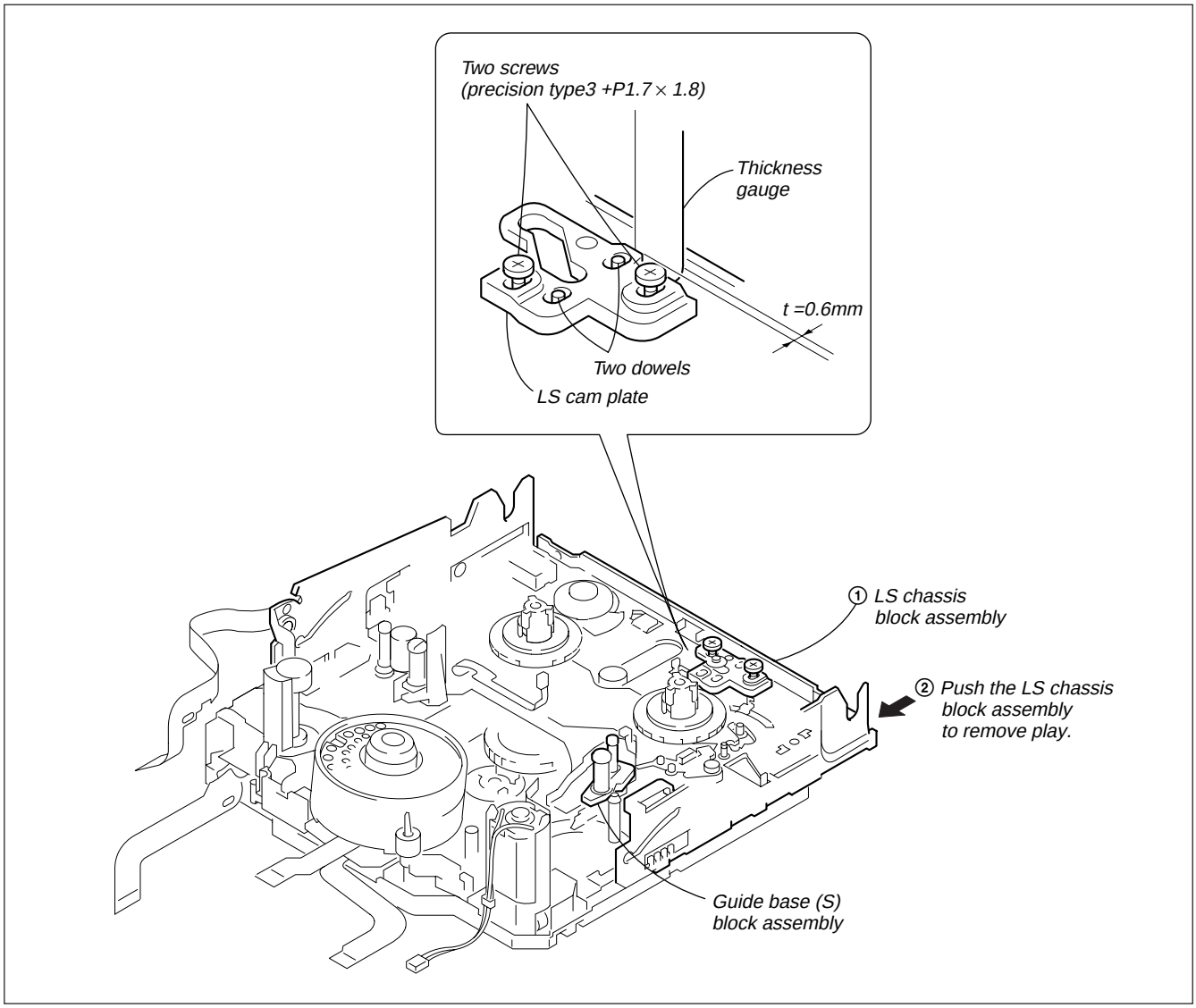


*Fig. 4-9.*

## 4-10. LS Chassis Block Assembly

### 1. Removal procedure

1) Move the LS chassis block assembly between USE and LOAD.
2) Remove the blind plate. (Refer to 4-5.)
3) Remove the R drive gear assembly. (Refer to 4-8.)
4) Remove the HCL cut (1.8 × 4 × 0.5) ①.
5) Remove the three screws (M1.4 × 2.5) ②.
6) Remove the LS chassis block assembly ③ in the direction of the arrow Ⓐ.

### 2. Attachment procedure

1) Insert the LS guide roller and LS guide T2 pin of the mechanical chassis block assembly into the slot of the LS chassis block assembly ④.
2) Insert the pin of the LS arm assembly into the cam groove on the LS cam plate, face the TG7 drive pin ⑤ in the direction of the arrow Ⓑ, and insert it to the two slot of the mechanical chassis. Then, tighten the three screws (M1.4 × 2.5) ② in the order of Ⓒ, Ⓓ and Ⓔ.
   Tightening torque: 0.078 ± 0.01 N•m (0.8 ± 0.1 kgf•cm)
3) Attach the HCL cut (1.8 × 4 × 0.5) ① to the pin of the LS arm assembly.
4) Attach the R drive gear assembly. (Refer to 4-8.)
5) Attach the blind plate. (Refer to 4-5.)
6) Clean the tape running path. (Refer to 2-2.)

**Note:** Each arm must move smoothly.

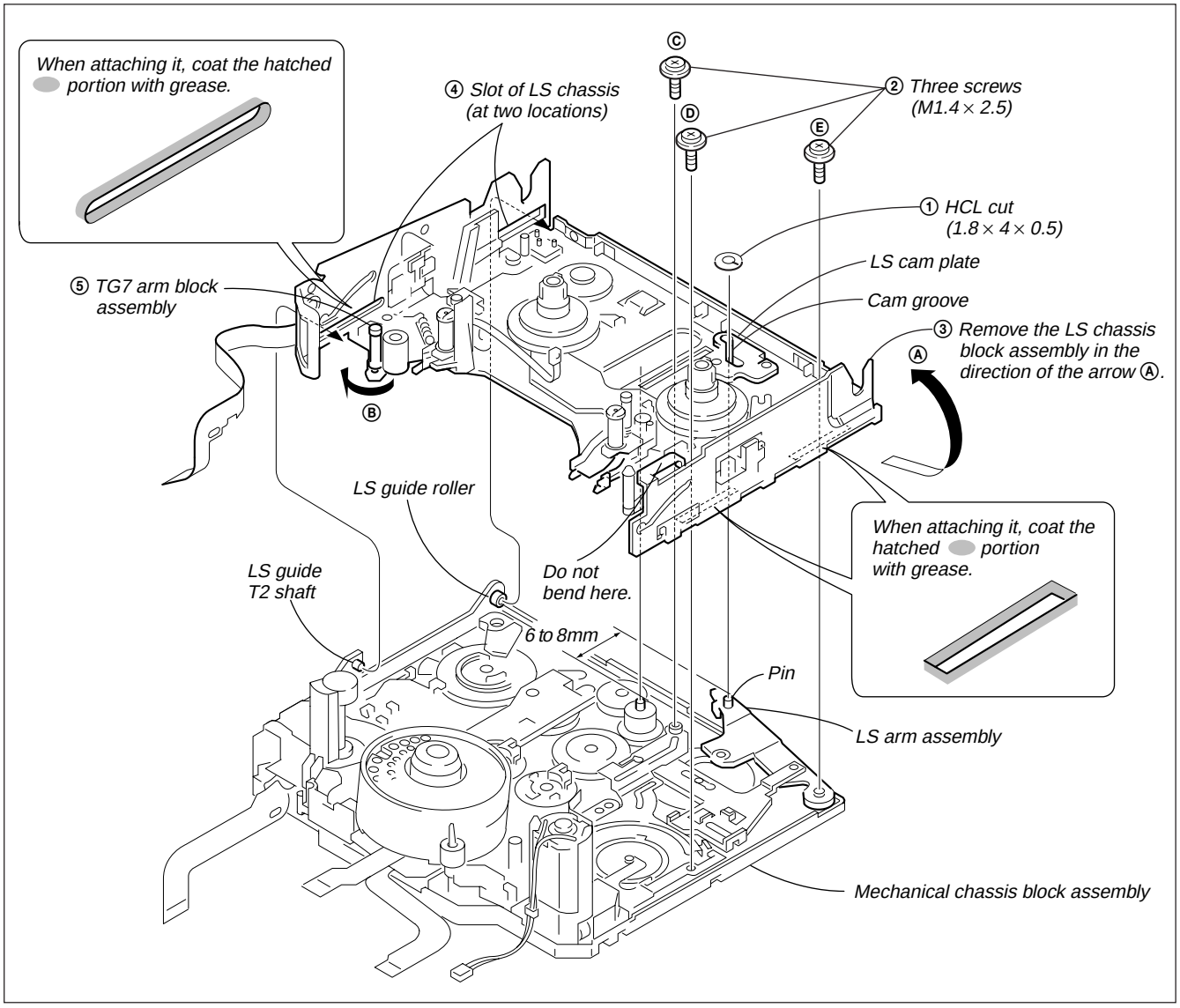


*Fig. 4-10.*

## 4-11. TG7 Arm Block Assembly, Pinch Arm Assembly

### 1. Removal procedure

1) Remove the LS chassis block assembly. (Refer to 4-10.)
2) Remove the screw (camera pan2 M1.4 × 1.6) ①.
3) Remove the TG7 retainer ② in the direction of the arrow.
4) Remove the TG7 arm block assembly ⑥ and TG7 arm spring ⑦.
5) Remove the pinch roller arm assembly ③.
6) Remove the P lim arm roller ④ and pinch arm load spring ⑤.

### 2. Attachment procedure

1) Attach the P lim arm roller ④ to the pinch roller arm assembly ③.
2) Insert one end of the pinch arm load spring ⑤ into the hole on the rising metal sheet of the LS chassis block assembly, and hook the other end of the spring on the position setting protrusion of the LS-057 board.
3) Attach the pinch roller arm assembly ③ to the shaft of the LS chassis block assembly, and hook the pinch arm load spring ⑤ on the rising metal sheet of the pinch roller assembly ③.
4) Hook the TG7 arm spring ⑦ on the shaft of the LS chassis block assembly while the hook side of the spring is facing downward.
5) When attaching the TG7 arm block assembly ⑥ to the shaft of the LS chassis block assembly, hook the hook side of the TG7 arm spring ⑦ on the rising metal sheet of the LS chassis block assembly and hook the top side of the spring to the notch of the TG7 arm block assembly ⑥.
6) Attach the TG7 retainer ② with the screw (camera pan2 M1.4 × 1.6) ①.
7) Remove the LS chassis block assembly. (Refer to 4-10.)
   Tightening torque: 0.078 ± 0.01 N•m (0.8 ± 0.1 kgf•cm)
8) Clean the tape running path. (Refer to 2-2.)

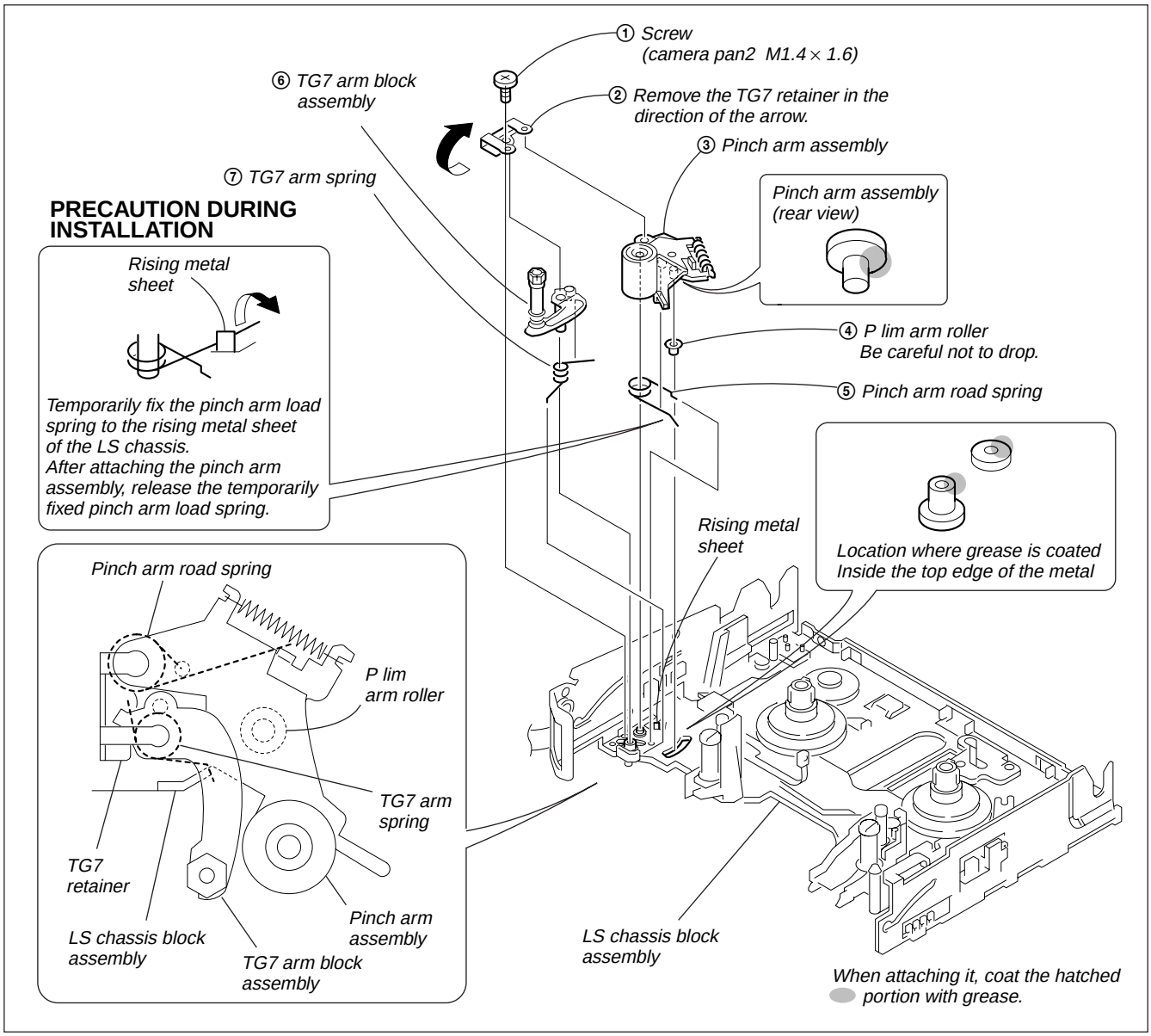


*Fig. 4-11.*

## 4-12. Guide Base (T) Block Assembly, Guide Base (S) Block Assembly

### 1. Removal procedure

1) Remove the LS chassis block assembly. (Refer to 4-10.)
2) Align the claw of the guide base (T) block assembly ① with the notch of the guide arm T and remove the guide base (T) block assembly.
3) Remove the screw (M1.4 × 2.5) ② and remove the guide rail (T) ③.
4) Align the claw of the guide base (S) block assembly ④ with the notch of the guide arm S and remove the guide base (S) block assembly.
5) Remove the screw (M1.4 × 2.5) ⑤ and remove the guide rail (S) ⑥.

### 2. Attachment procedure

1) Align the holes on the guide rail (S) ⑥ with the protrusions (at two locations) of the LS chassis block assembly and attach the guide rail (S) ⑥ with the screw (M1.4 × 2.5) ⑤.
   Tightening torque: 0.078 ± 0.01 N•m (0.8 ± 0.1 kgf•cm)
2) Attach the guide base (S) block assembly ④ while aligning it with the groove on the guide arm S.
3) Align the holes on the guide rail (T) ③ with the protrusions (at two locations) of the LS chassis block assembly and attach the guide rail (T) ③ with the screw (M1.4 × 2.5) ②.
   Tightening torque: 0.078 ± 0.01 N•m (0.8 ± 0.1 kgf•cm)
4) Attach the guide base (T) block assembly ① while aligning it with the groove on the guide arm T.
   **Note:** Do not forget to hook the plate spring.
5) Withdraw the joint portion of the guide arm S and the guide arm T in the directions of the arrows Ⓐ and Ⓑ.
6) Attach the LS chassis block assembly to the mechanical chassis. (Refer to 4-10.)
7) Clean the tape running path. (Refer to 2-2.)

**Note:** Be careful of the shape of the guide base T/S block assembly.
Guide base (T) block assembly = Guide base (small)
Guide base (S) block assembly = Guide base (large)

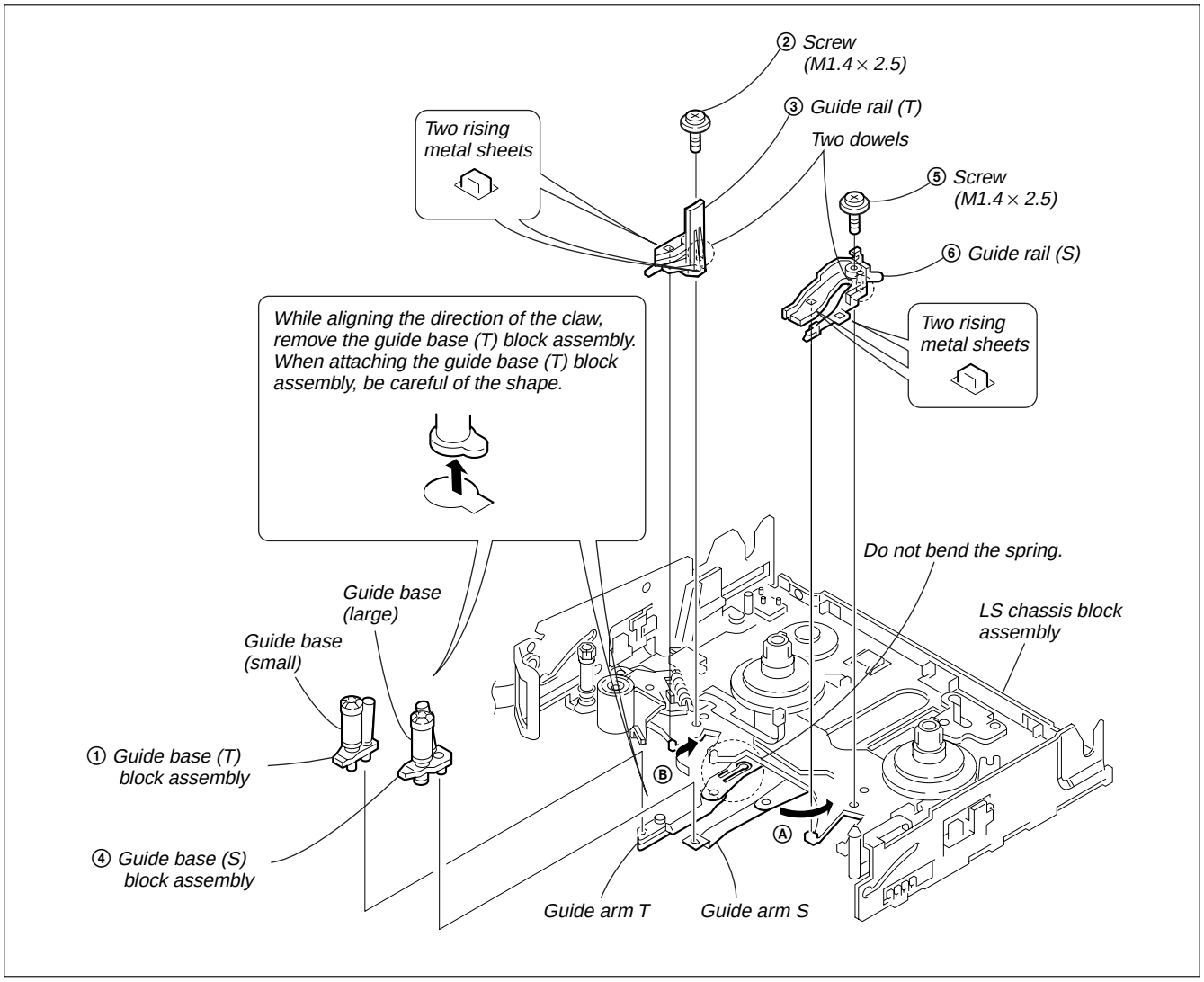


*Fig. 4-12.*

## 4-13. TG1 Arm, Reel Table (S) Assembly, Push Switch (3Key)

### 1. Removal procedure

1) Remove the TG1 arm spring ①.
   **Note:** Take note of the position where the spring has been hooked.
2) Remove the TG1 arm ②.
3) Open the claw of the reel table (S) assembly ④ in the directions of the arrows Ⓑ and Ⓒ and remove the reel table S assembly.
4) Remove the RVS arm spring ⑤.
5) Rotate the S ratchet arm ③ in the direction of the arrow Ⓐ and remove the BT band assembly ⑥.
6) Remove the lock guide ⑦.
7) Remove the four solderings of the LS-057 board.
8) Remove the two claws ⑨ of the cassette guide T ⑫ from the notch of the LS chassis.
9) Remove the push switch (3key) ⑪ by releasing the two claws of the cassette guide T ⑫.

### 2. Attachment procedure

1) Attach the push switch (3key) ⑪ to the cassette guide T ⑫ with the two claws ⑩.
2) Attach the cassette guide T ⑫ to the notch of the LS chassis block assembly with the two claws ⑨.
3) Solder the cassette guide T ⑫ to the LS-057 board at the four locations.
4) Attach the lock guide ⑦.
5) Attach the BT band assembly ⑥.
6) Check the location of the reel table S ④. Then, rotate the S ratchet arm ③ in the direction of the arrow Ⓐ and insert the band of the BT band assembly ⑥ into the groove on the side.
7) Attach the BT band assembly to the TG1 arm ② and attach it to the mechanism chassis block assembly.
8) Check the shape of the hook of the TG1 arm spring ①. Hook one end of the spring on the TG1 arm ②. Then, hook the other end of the spring on the same location of the LS chassis block assembly where you have taken note when the spring is removed.
9) Attach the RVS arm spring.
10) Check the TG1 back-tension. (Refer to 5-1.)
    **Note:** The BT band assembly ⑤ must be completely inserted into the groove on the side of the reel table (S) ④.

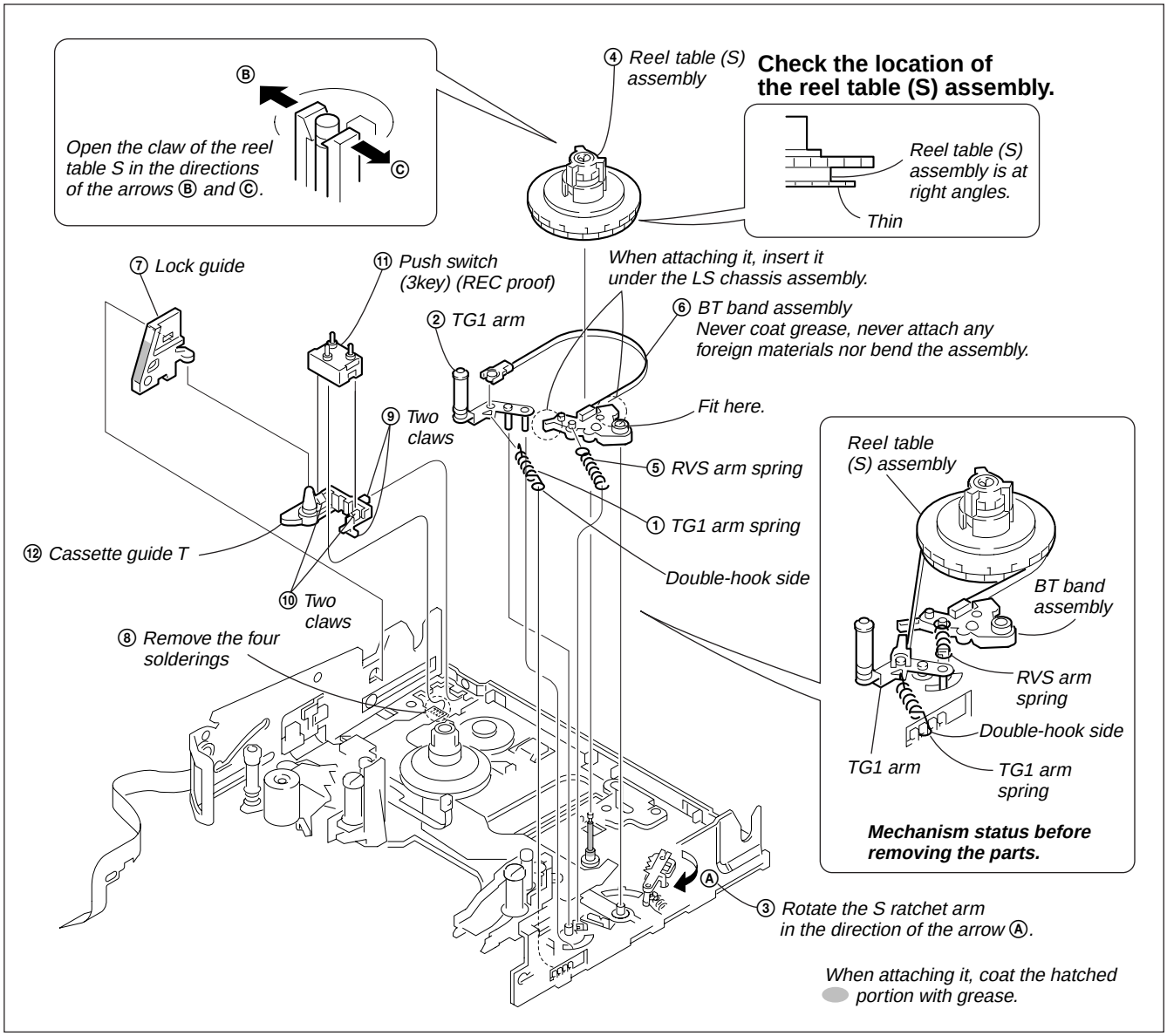


*Fig. 4-13.*

## 4-14. Hall Element (H001, H002 (T/S Reel)), Photo Transistor (Q001, Q002 (Tape Top/Tape End), D001 (Tape LED)), LED (D001 (Tape LED))

### 1. Removal procedure

1) Remove the LS chassis block assembly. (Refer to 4-10.)
2) Remove the LS grease cover.
3) Remove the two solderings and remove Q001 (tape top).
4) Remove the two solderings and remove Q002 (tape end).
5) Remove the two solderings and remove D001 (tape LED).
6) Remove the four solderings respectively from H001 (T reel) and H002 (S reel) and remove the H001 and H002.

### 2. Attachment procedure

1) Solder H001 (T reel) and H002 (S reel) respectively at the four locations.
2) Solder Q002 (tape end) at the two locations.
3) Solder Q001 (tape top) at the two locations.
4) Solder D001 (tape LED) at the two locations.
5) Attach the LS grease cover.
6) Attach the LS chassis block assembly to the mechanical chassis. (Refer to 4-10.)

**Note:** Be careful of the plarities of the Hall element (H001, H002), Photo-transistor (Q001, Q002) and LED (D001).

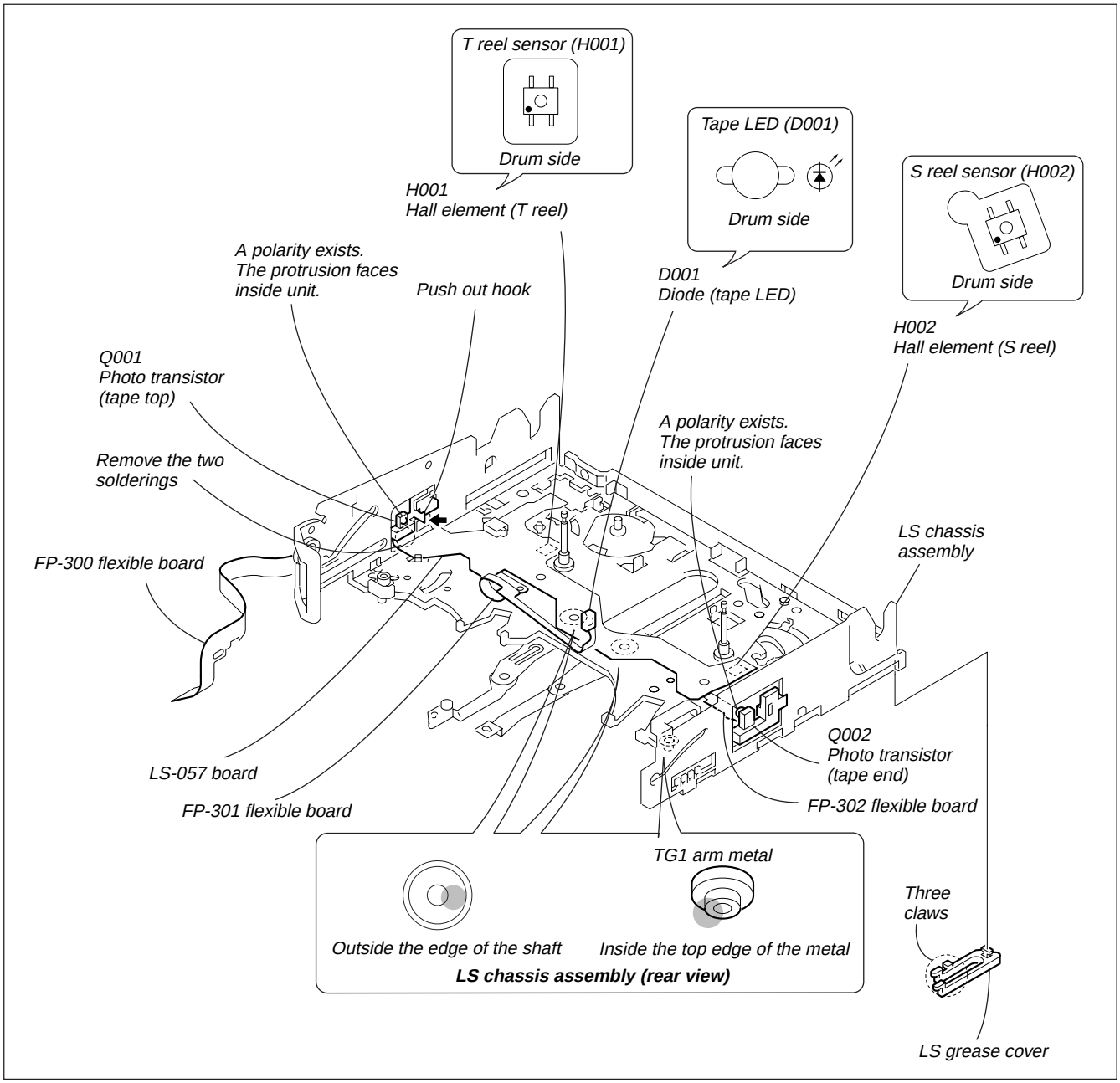


*Fig. 4-14.*

## 4-15. LS Guide Roller, Guide Lock Plate (T), Pinch Pusher Assembly, Eject Arm

### 1. Removal procedure

1) Remove the LS chassis block assembly. (Refer to 4-10.)
2) Remove the LS guide roller ①.
3) Remove the P pressure plate spring ②.
4) Remove the HLW cut (0.98 × 3 × 0.25) ③.
5) Remove the pitch pressure plate assembly ④ in the direction of the arrow Ⓐ.
6) Remove the relay gear ⑤.
7) Remove the screw (camera pan2 M1.4 × 1.6) ⑥.
8) Remove the guide lock plate (T) ⑦ in the direction of the arrow Ⓑ.
9) Remove the eject arm spring ⑧ and HLW cut (0.98 × 3 × 0.25) ⑨.
   **Note:** Do not reuse the HLW cut.
10) Remove the eject arm ⑩.

### 2. Attachment procedure

1) Attach the eject arm spring ⑧ to the eject arm ⑩.
2) Hook one end of the eject arm spring ⑧ on the protrusion of the main chassis block assembly and attach the eject arm to the shaft.
3) Attach the HLW cut (0.98 × 3 × 0.25) ⑨.
   Do not reuse the HLW cut.
4) Attach the guide lock plate T ⑦ while aligning it with the notches Ⓒ and Ⓓ.
5) Attach the screw (camera pan2 M1.4 × 1.6) ⑥.
   Tightening torque: 0.078 ± 0.01 N•m (0.8 ± 0.1 kgf•cm)
6) Attach the relay gear ⑤.
7) Attach the pinch pusher plate ④ with the HLW cut (0.98 × 3 × 0.25) ③.
8) Attach the P pressure plate spring ②.
   Insert the concave side of the LS guide roller ① into the shaft to attach the LS guide roller.
   **Note:** Insert the roller completely.
9) Attach the LS chassis block assembly to the mechanical chassis. (Refer to 4-10.)

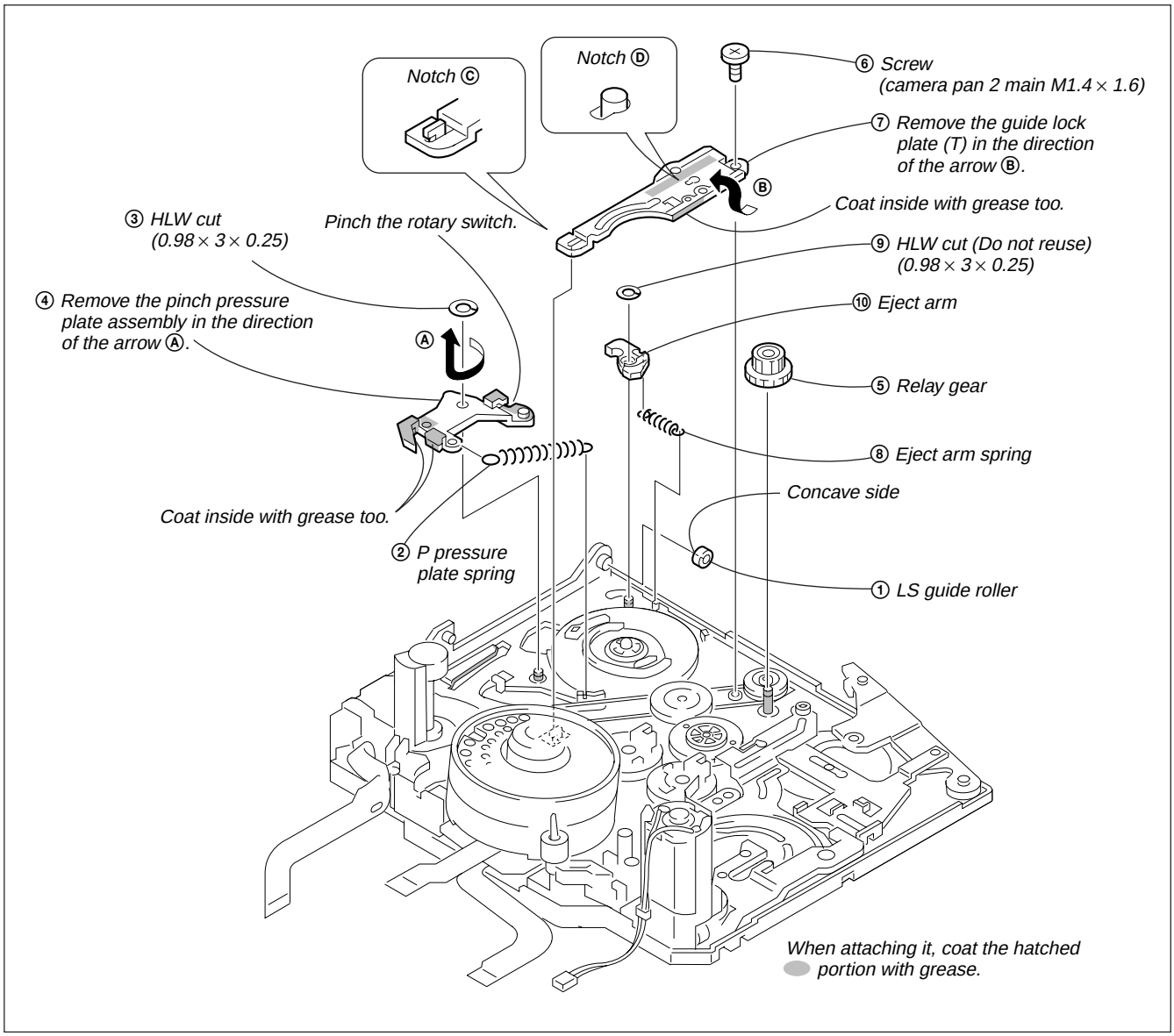


*Fig. 4-15.*

## 4-16. Rotary Switch, Cam Relay Gear, Change Gear Assembly, Timing Belt

Before replacing the timing belt, remove the guide rail T2 and capstan motor. (Refer to 4-4.)

### 1. Removal procedure

1) Remove the LS chassis block assembly. (Refer to 4-10.)
2) Remove the guide lock plate (T), pinch pressure assembly and eject arm. (Refer to 4-15.)
3) Remove the cam relay gear ①.
4) Remove the timing belt ②.
5) Remove the HLW cut (0.98 × 3 × 0.25) ③ and change gear assembly ④.
6) Remove the four solderings ⑤ and remove the FP-299 flexible wiring board ⑥.
7) Push up the dowel of the rotary switch ⑦ from the bottom of the mechanism chassis assembly and remove the rotary switch in the direction of the arrow.

### 2. Attachment procedure

1) Insert the dowel of the rotary switch ⑦ into the hole on the mechanism chassis assembly and attach the rotary switch clockwise.
2) Align the FP-299 flexible wiring board ⑥ with the reference hole on the mechanism chassis and solder the flexible wiring board to the rotary switch ⑦ (at four locations).
3) Attach the change gear assembly ④ with the HLC cut (0.98 × 3 × 0.25)③.
4) Attach the timing belt ②.
   **Note:** There must be a clearance between the rotary switch ⑦ and timing belt ②.
5) Attach the cam relay gear ①.
   The in-phase markings of the rotary switch ⑦, cam relay gear (2) and cam relay gear (1) must be aligned.
6) Attach the guide lock plate (T), pinch pressure assembly and eject arm. (Refer to 4-15.)
7) Attach the LS chassis block assembly to the mechanical chassis. (Refer to 4-10.)
8) Clean the shaft of the capstan motor. (Refer to 2-2.)

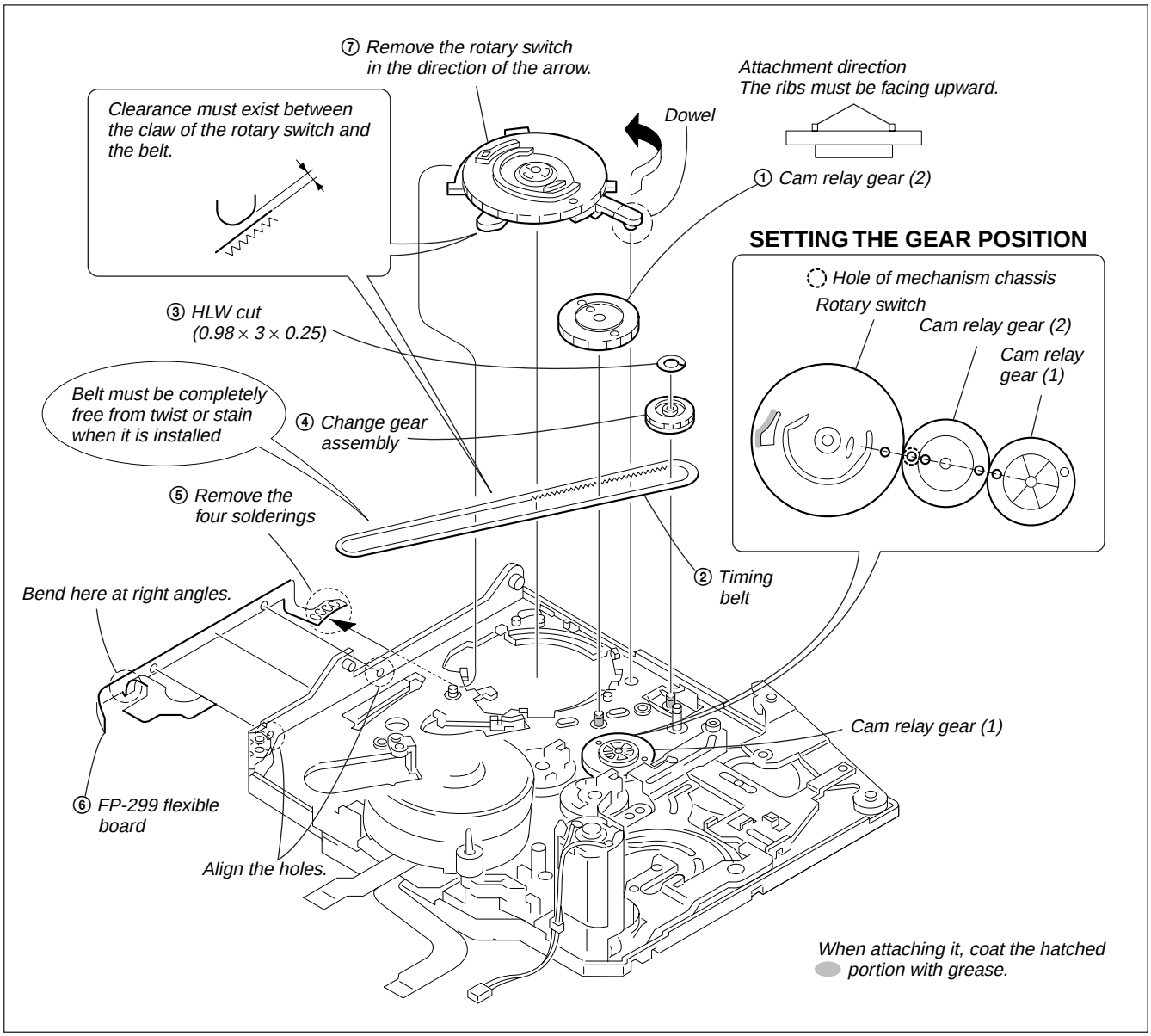


*Fig. 4-16.*

## 4-17. Guide Gear Assembly, Guide Gear T Assembly, Cam Relay Gear 1, Guide Lock Plate (S)

### 1. Removal procedure

1) Remove the LS chassis block assembly. (Refer to 4-10.)
2) Remove the screw (camera pan2 main M1.4 × 1.6) ①.
3) Remove the guide lock plate (S) ② in the direction of the arrow Ⓐ.
4) Remove the two stop rings (E type 1.2) ③.
5) Remove the guide gear (S) assembly ④ and guide gear (T) assembly ⑤.
6) Remove the HLW cut (0.98 × 3 × 0.25) ⑥.
7) Remove the cam relay gear (1) ⑦.

### 2. Attachment procedure

1) Attach the cam relay gear (1) ⑦ with the HLW cut (0.98 × 3 × 0.25) ⑥.
   **Note:** The in-phase markings of the cam relay gear (1) ⑦, cam gear (2) and cam relay gear must be aligned.
2) Attach the guide gear (T) assembly ⑤ and guide gear (S) assembly ④ to the shaft in this order and adjust the positions. Then, attach them with the two stop rings (E type 1.2) ③.
   **Note1:** The in-phase markings of the GL arm assembly, guide gear (S) ④ and guide gear (T) ⑤ must be aligned.
   **Note2:** The guide gear assembly (S/T) has a different shape respectively. Pay attention to the shapes.
3) Fit the guide lock plate (S) ② in the groove on the shaft and insert the portion Ⓑ into the notch. Then, attach the plate with the screw (camera pan2 main M1.4 × 1.6) ①.
   Tightening torque: 0.078 ± 0.01 N•m (0.8 ± 0.1 kgf•cm)
4) Attach the LS chassis block assembly to the mechanical chassis. (Refer to 4-10.)

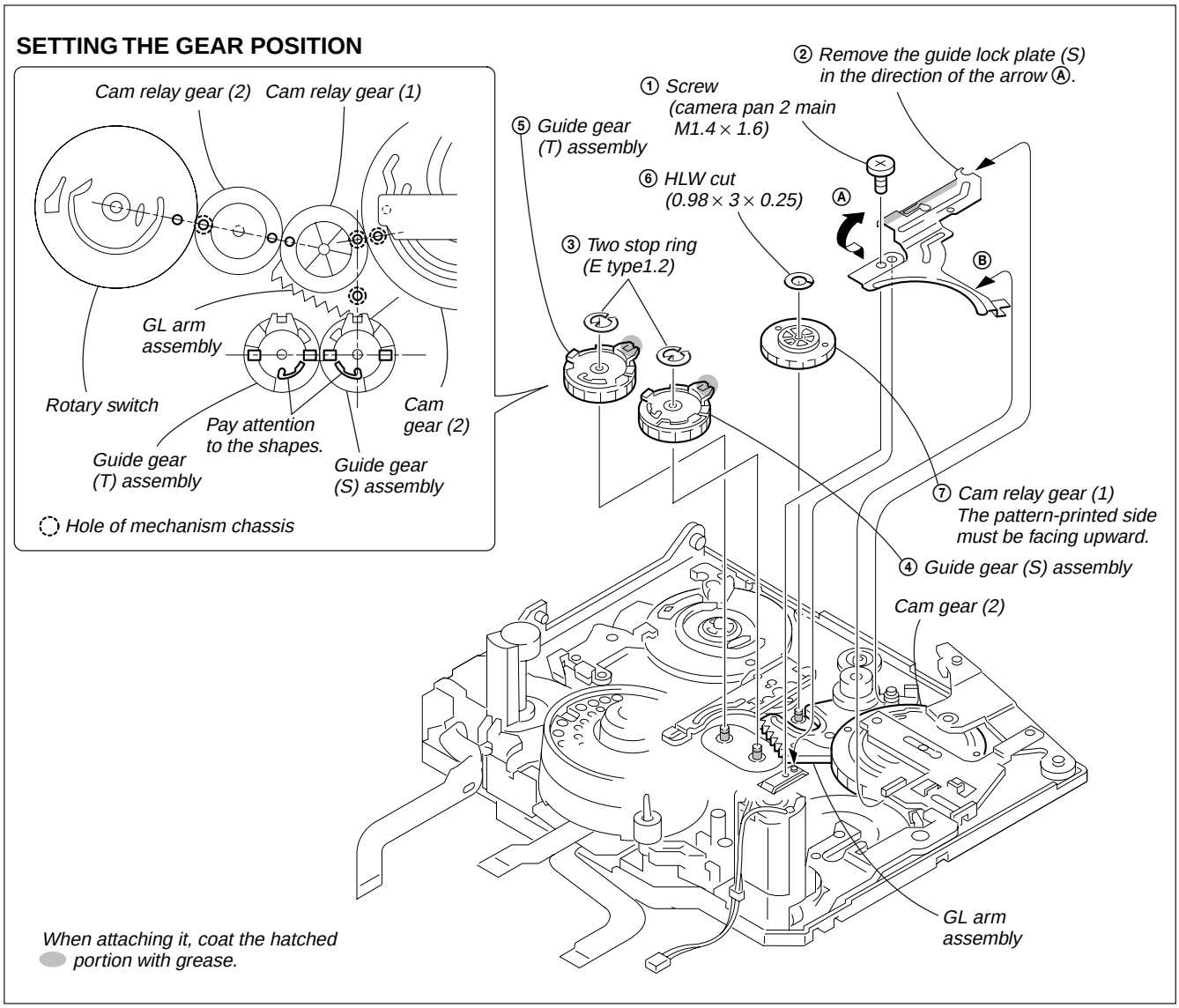


*Fig. 4-17.*

## 4-18. LD Gear 4, Cam Gear 1, HC Drive Arm

Remove in advance the HCL arm assembly and loading motor assembly beforehand. (Refer to 4-2.)

### 1. Removal procedure

1) Remove the LS chassis block assembly. (Refer to 4-10.)
2) Remove the guide lock plate (S). (Refer to 4-17.)
3) Remove the cover sheet ① and LD gear (4) ②.
4) Remove the T1 limiter arm ③ and cam gear (1) ④.
5) Remove the HC drive arm ⑤ in the direction of the arrow.

### 2. Attachment procedure

1) Attach the HC drive arm ⑤ under the drive base assembly.
2) Attach the cam gear (1) ④.
   The dowel of the HC drive arm ⑤ must be inserted into the groove on the lower side of the cam gear (1) ④.
   The in-phase markings of the cam gear (1) ④, cam gear (2) and cam relay gear (1) must be aligned.
3) Attach the LD gear (4) ② with the cover sheet ①.
4) Attach the guide plate (S).
5) Attach the LS chassis block assembly to the mechanical chassis. (Refer to 4-10.)
6) Clean the tape running path. (Refer to 2-2.)

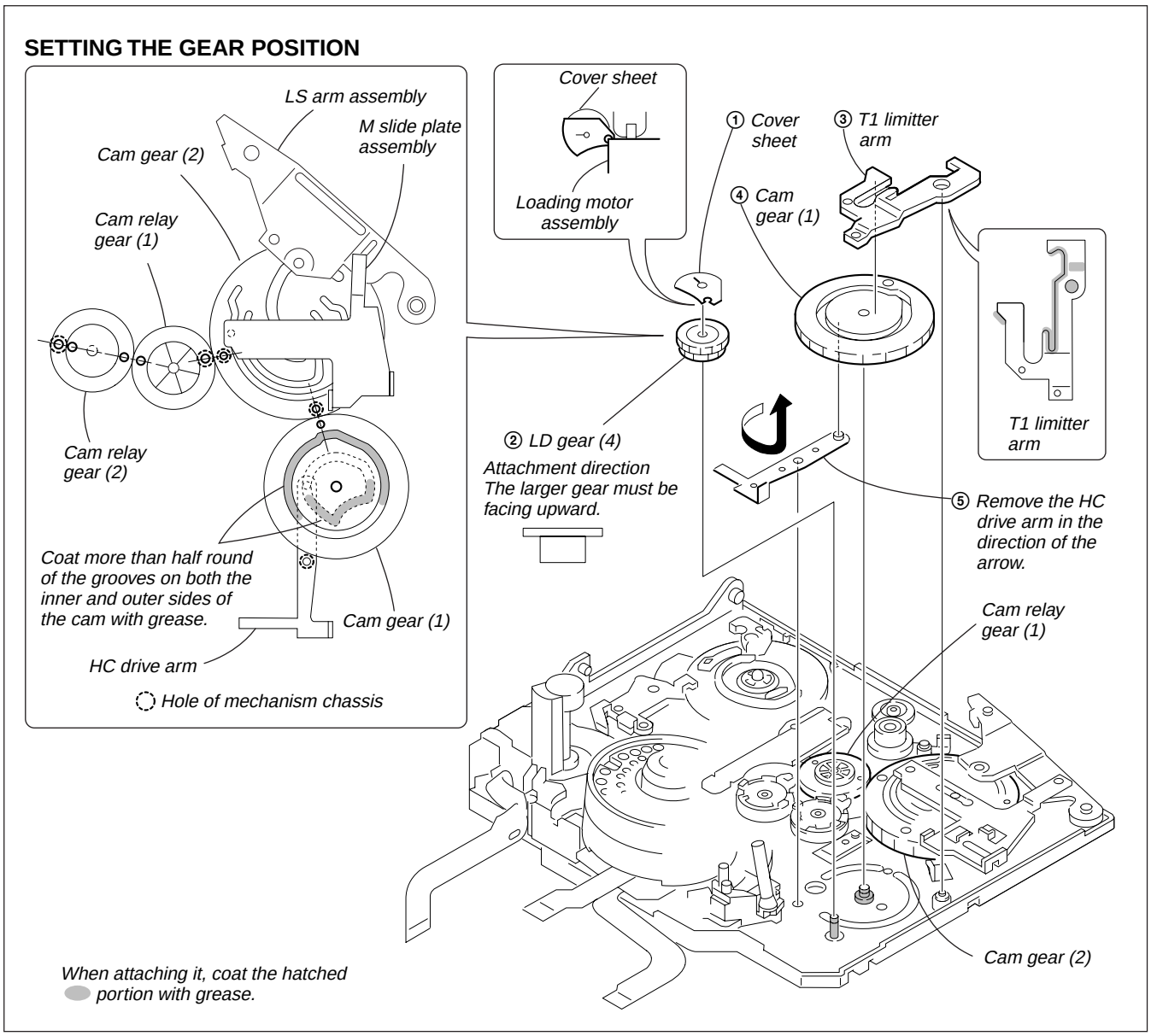


*Fig. 4-18.*

## 4-19. M Slide Plate Assembly, LS Arm Assembly, Cam Gear 2, GL Arm Assembly

### 1. Removal procedure

1) Remove the LS chassis block assembly. (Refer to 4-10.)
2) Remove the guide lock plate (S) (Refer to 4-17.)
3) Remove the relay gear ①.
4) Remove the M slide plate assembly ② in the direction of the arrow Ⓐ.
5) Remove the LS arm assembly ③ and LS arm roller ④.
6) Remove the cam gear (2) ⑤.
7) Remove the GL arm assembly ⑥ from the lower side of the cam relay gear (1) in the direction of the arrow Ⓑ.
   **Note:** After removing the GL arm assembly, fix the guide gear (S/T) assembly.

### 2. Attachment procedure

1) Attach the GL arm assembly ⑥ to the shaft so that the GL arm assembly ⑥ is positioned under the cam relay gear (1) .
   **Note:** The in-phase markings of the guide gear (S/T) assembly and GL arm assembly ⑥ must be aligned.
2) While aligning the cam gear (2) ⑤ with the dowel of the GL arm assembly, attach the cam gear (2) ⑤.
   **Note:** The in-phase markings of the cam relay gear (1), cam gear (1) and cam gear (2) ⑤ must be aligned.
3) Attach the LS arm roller ④ to the LS arm assembly ③. While aligning them with the cam groove on the cam gear (2) ⑤, attach them.
4) Attach the M slide plate assembly ②.
5) Attach the relay gear ①.
6) Attach the guide lock plate (S). (Refer to 4-17.)
7) Attach the LS chassis block assembly to the mechaical chassis. (Refer to 4-10.)

**Note:** Check that the in-phase marking of each gear is aligned.

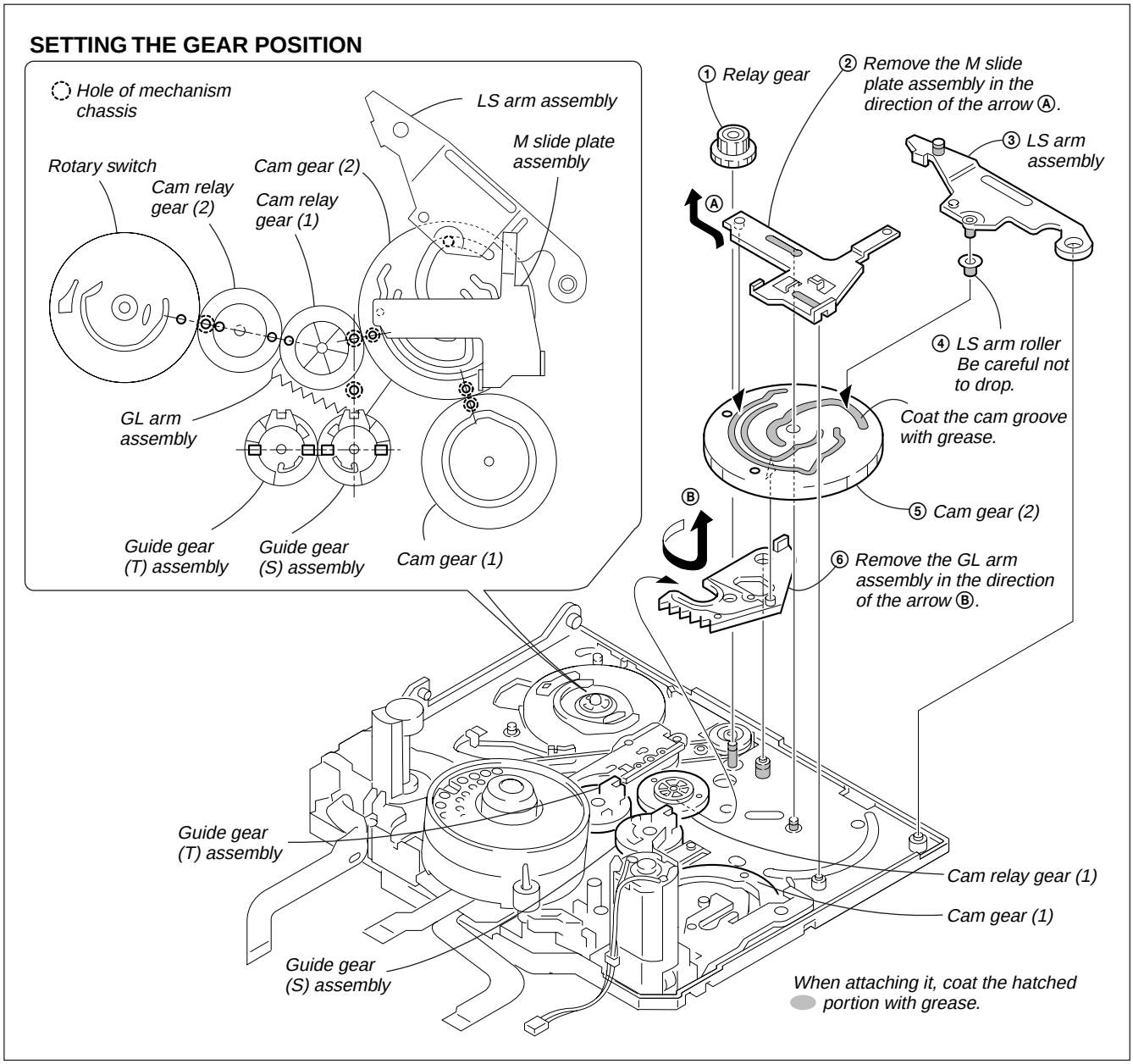


*Fig. 4-19.*

# 5. Adjustment

## 5-1. Check and Adjustment of TG1 Back-tension Position

### 1. Check Procedure

1) Assemble the mechanism deck into the main unit.
2) Thread a normal tape and let the machine enter the PB (or REC) mode.
3) Check that the distance between the upper flange of the TG1 guide and the side surface of the LS chassis block is 12.0 ± 0.4 mm (range of fluctuation: 0.5 mm or less).

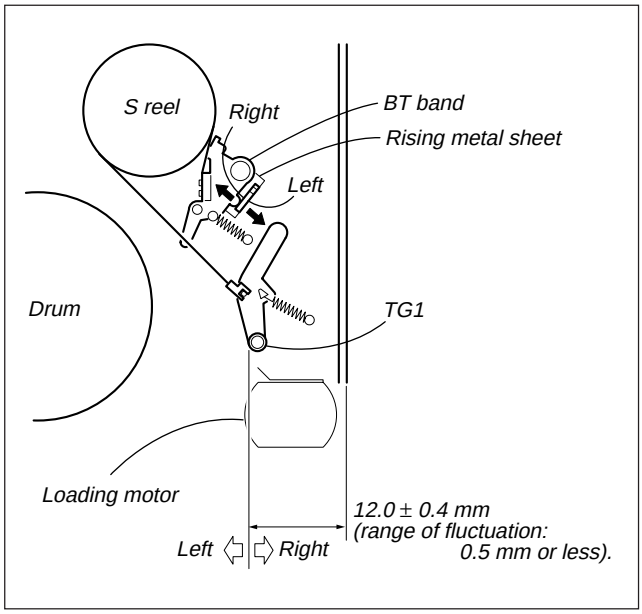


*Fig. 5-1.*

### 2. Adjustment Procedure

1) Remove the cassette compartment and the blind plate.
2) Adjust the position of the TG1 guide by changing the tilt of the rising metal sheet of the LS chassis block assembly.

## 5-2. Check and Adjustment of FWD/RVS Back-tension

### 1. Check Procedure

1) Install the mechanism deck in the main unit and set the take-up torque cassette (Ref. No. J-7).
2) Check the FWD/RVS take-up torque.
   Check the FWD torque in the PLAY state.
   Specified value: 7 to 12 gf•cm
   Check the RVS torque in the RVS state.
   Specified value: 19.5 to 29.5 gf•cm

### 2. Adjustment Procedure

1) If the value of the FWD torque is larger than the specifications, change the position where the TG1 arm spring is hooked in the direction of the arrow Ⓐ. If the value of the FWD torque is smaller than the specifications, change the position in the direction of the arrow Ⓑ.

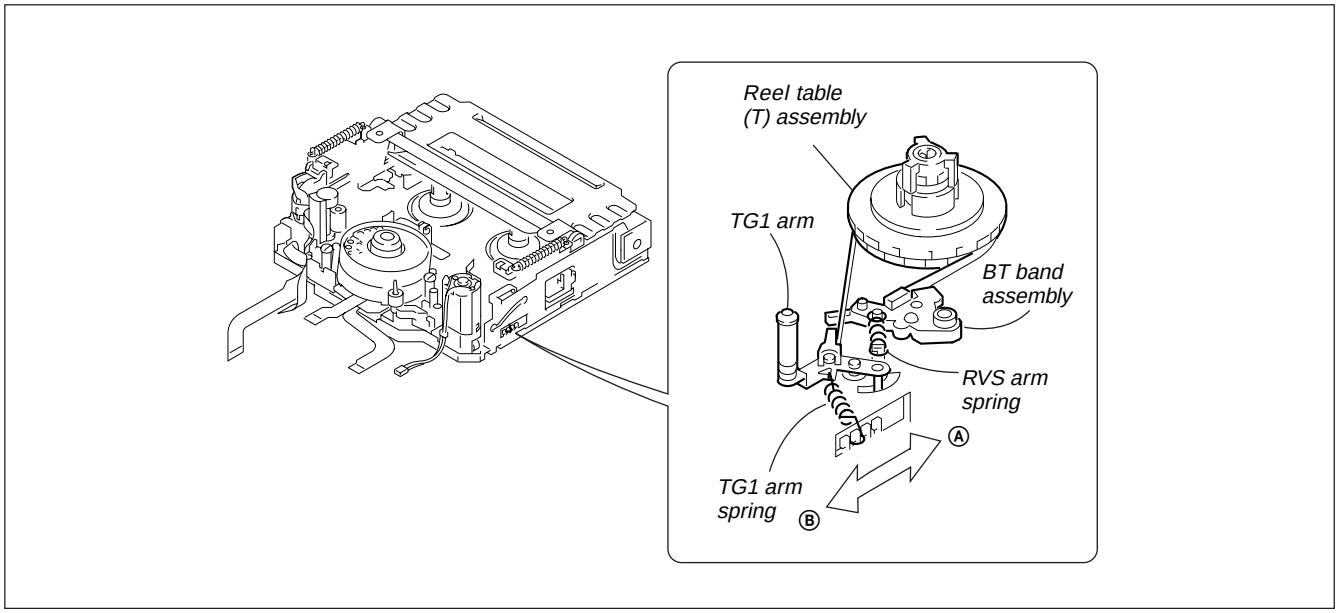


*Fig. 5-2.*

## 5-3. Capstan Motor Azimuth Position Adjustment

### 1. Check Procedure

1) Insert the thickness gauge (Ref. No. J-16) of 0.75 mm between the protrusion of the mechanism chassis and the capstan motor, and check the azimuth position.

### 2. Adjustment Procedure

1) Loosen the capstan azimuth adjustment screw (SANG camera pan 2 M1.4 × 4.5), and insert the thickness gauge (0.75 mm)(Ref. No. J-16) between the protrusion of the mechanism chassis and the capstan motor.
2) Slowly tighten the capstan azimuth adjustment screw until it slightly contacts the thickness gauge, and remove the thickness gauge.

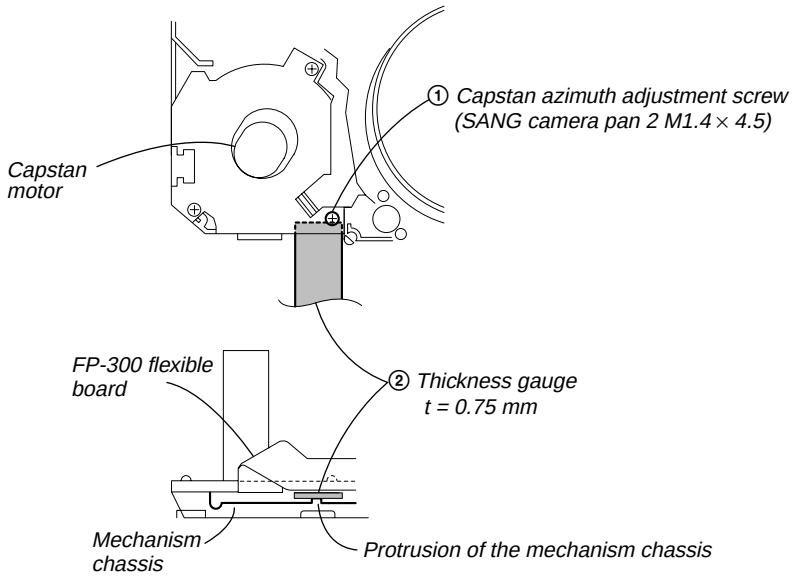


***Fig. 5-3.***

## 5-4. Tape Path Adjustment

**Purpose:** Adjust the linearity of the head.

**If the adjustment is not correct:**

Noise appears on the top and bottom of the screen when playing back the tape that is recorded by other recorders.

### 5-4-1. Adjustment Preparation

1) Clean the tape running surface (tape guides, drum, capstan shaft, pinch roller).
2) Connect the adjustment remote commander to the remote terminal.
3) Set the adjustment remote commander to the PATH mode (track shift mode)* and release the auto tracking.
4) Connect an oscilloscope as follows:
   CH1: Test connector' PB RF terminal
   External trigger: Test connector' RF SWP terminal
5) Playback the tracking alignment tape WR5-1NP (NTSC), WR5-1CP (PAL) (Ref. No. J-6).
6) Confirm that the RF waveform on scope is flat both at entrance side and exit side.
   If the RF waveform is not flat, perform the adjustment by referring to section 4-2.)
7) After the adjustment is completed, release the PATH mode (track shift mode)*.

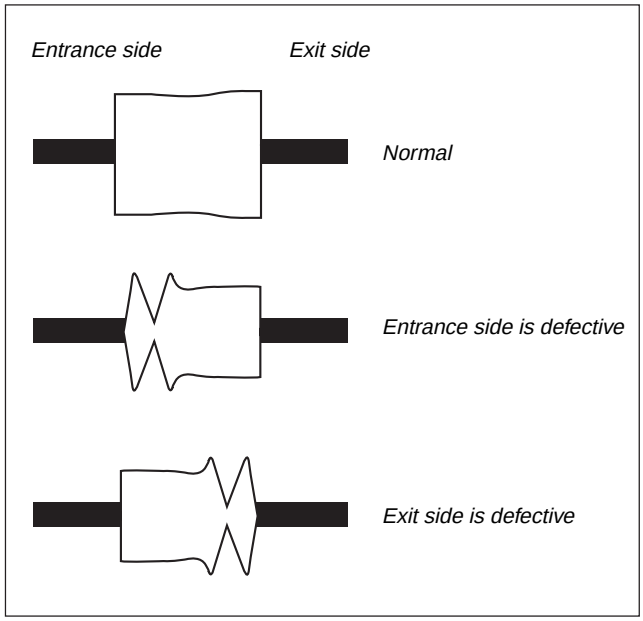


*Fig. 5-4.*

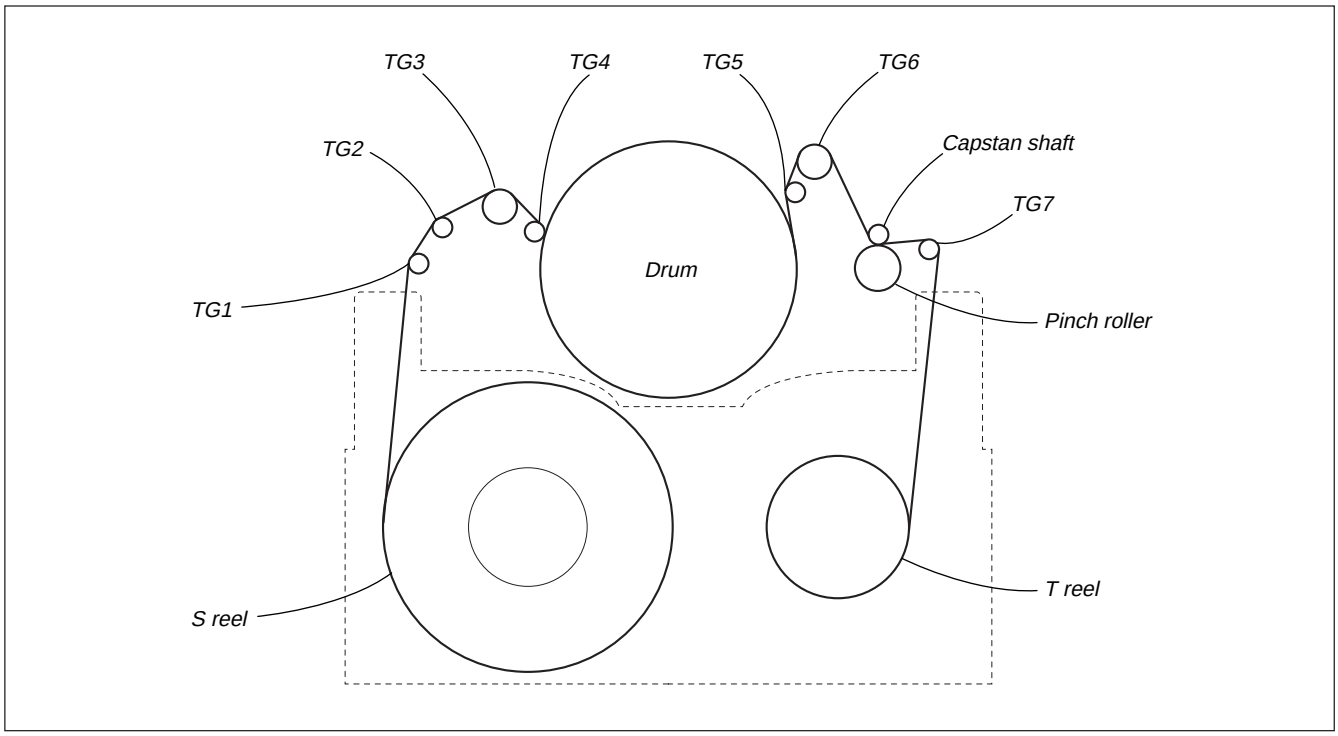


*Fig. 5-5.*

* **Setting and releasing the track shift mode**

In case of the DCR-TRV230

**Setting**

1. Select page: 0, address: 01 and set data: 01.
2. Select page: F, address: 22 and set data: 88, and press the PAUSE button.
3. Select page: 2, address: 2E and set data: 02. (Note)

**Releasing**

1. Select page: 0, address: 01 and set data: 01.
2. Select page: F, address: 22 and set data: 80, and press the PAUSE button.
3. Select page: 2, address: 2E and set data: 00.
4. Select page: 0, address: 01 and set data: 00. (Note)

**Note:** In case of the Digital8 only, set the data of page: 2, address: 2E.

### 5-4-2. Tracking Adjustment (Refer to Fig. 5-6.)

1) Playback the tracking alignment tape WR5-1NP (NTSC), WR5-1CP (PAL) (Ref. No. J-6).
2) Adjust the No.3 guide until the envelope at the entrance side waveform becomes flat.
3) Adjust the No.6 guide until the envelope at the exit side waveform becomes flat.

☆ The TG-3/6 zenith adjustment screws do not need to be adjusted.

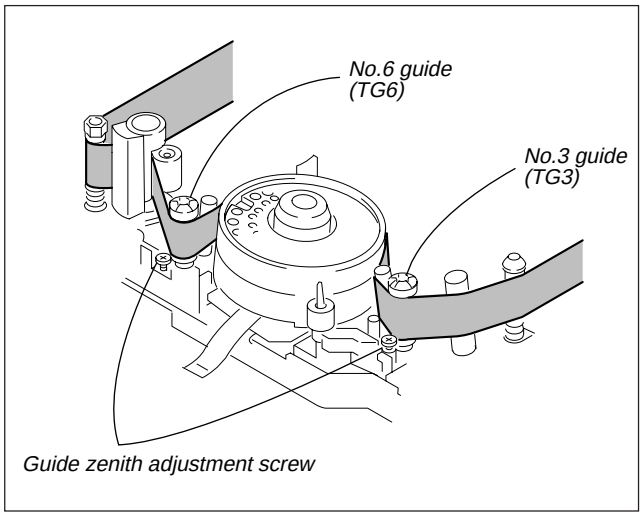


*Fig. 5-6.*

### 5-4-3. No.7 Guide (TG7) Adjustment (Refer to Fig. 5-7.)

1) Playback the tape and set the REV mode.
2) Confirm that tape slack does not occur in between the No.6 guide (TG6) ① and capstan ②. If any tape slack occurs, rotate the TG7 nut ④ of the No.7 guide (TG7) ③ to remove the tape slack.
3) Playback the tape again and confirm that tape slack does not occur between the capstan ② and No.7 guide (TG7) ③. If the tape slack occurs exceeding the specifications (specifications: 0.5 mm or less), rotate the TG7 nut ④ to make the tape slack below the specifications (0.5 mm). When the tape slack between the No.6 guide (TG6) ① and capstan ② is 0.3 mm or less in the REV mode, it means that the adjustment is completed.

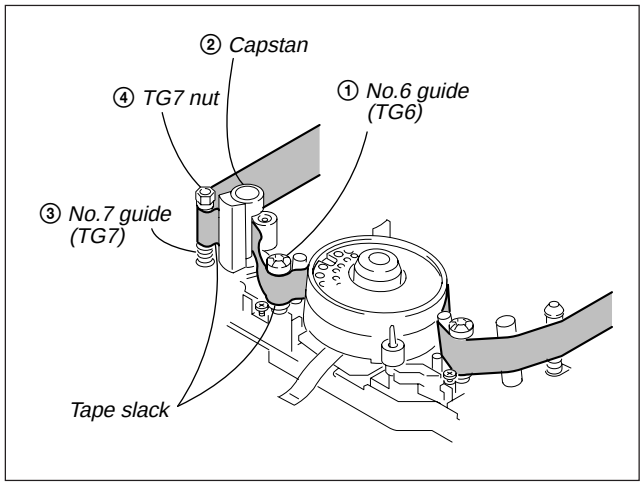


*Fig. 5-7.*

## 5-4-4. CUE and REV Waveform Check (Refer to Fig. 5-8)

1) Playback the tracking alignment tape WR5-1NP (NTSC), WR5-1CP (PAL)(Ref. No. J-6) and enter the REV mode.
   Confirm on an oscilloscope that the pitches between the peaks of the RF waveform are equally spaced for 5 seconds or more.
   If pitches between peaks of the RF waveform are not equal, perform sections “5-4-2 Tracking Adjustment” and “5-4-3 No. 7 Guide (TG7) Adjustment”.
2) Enter the UCE mode. Confirm on an oscilloscope that the pitches between the peaks of the RF waveform are equally spaced for 5 seconds or more.
   If pitches between peaks of the RF waveform are not equal, perform section “5-4-2 Tracking Adjustment”.

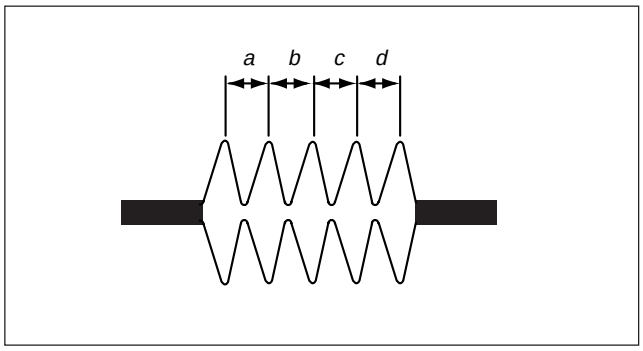


*Fig. 5-8.*

## 5-4-5. Check upon Completion of Adjustment

### 5-4-5-1. Tracking Check

1) Playback the tracking alignment tape in the PATH mode. Compare the amplitude of the RF waveform in the AUTO tracking mode and with that in the PATH mode. Confirm that the amplitude of the RF waveform decreases to about 3/4 when the tracking alignment tape is switched from the AUTO tracking mode to the PATH mode. (Refer to Fig. 5-9)
2) During step 1, confirm that the minimum amplitude ($E_{MIN}$) is 65% or more of the maximum amplitude ($E_{MAX}$) of the RF waveform. (Refer to Fig. 5-10)
3) Confirm that the RF waveform does not fluctuate too excessively.(Refer to Fig. 5-11)

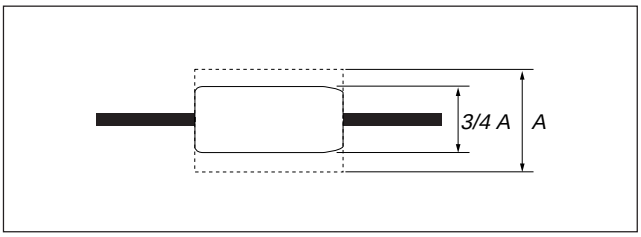


*Fig. 5-9.*

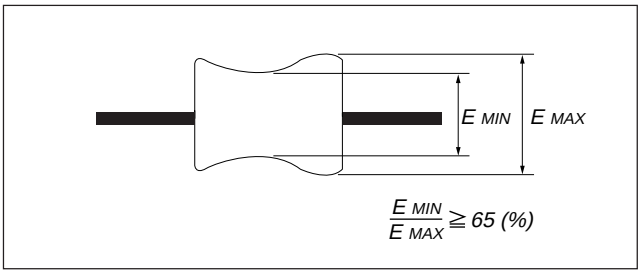


*Fig. 5-10.*

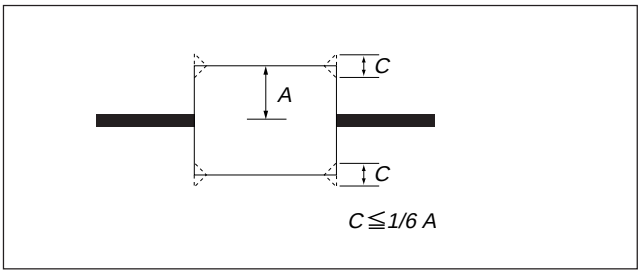


*Fig. 5-11.*

### 5-4-5-2. Rise-up Check (Refer to Fig. 5-12)

1) Playback the tracking alignment tape WR5-1NP (NTSC), WR5-1CP (PAL)(Ref. No. J-6).
2) Turn OFF the Track Shift mode.
3) Eject the cassette tape once. Then insert the cassette tape for loading again.
4) Confirm that the RF waveform rises up to the flat envelope within 3 seconds after the machine enters the PLAY mode. Check also that the tape slack does not occur at around the pinch roller.
5) Run the tape in the CUE/REV and the FF/REW mode. Then playback the tracking alignment tape and confirm the RF waveform rises up to the flat envelope within 3 seconds after the machine enters the PLAY mode. Check also that the tape slack does not occur at around the pinch roller.
6) Repeat the above steps 3) to 5) once again for re-check.

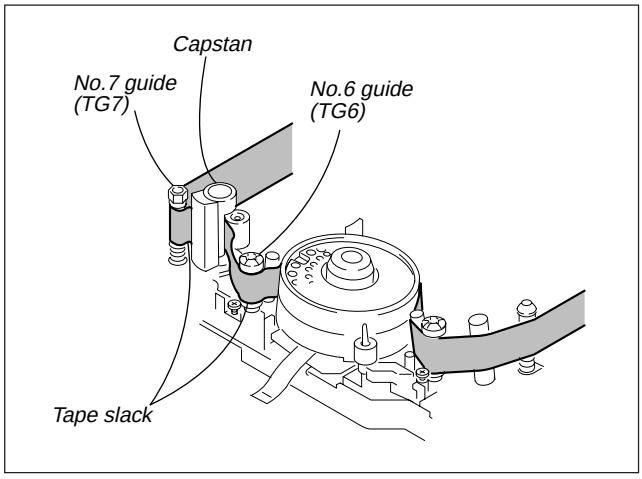


*Fig. 5-12.*

### 5-4-5-3. Tape Run Check (Refer to Fig. 5-13)

1) Playback the thin video tape such as P6-120MP (NTSC), P6-90MP (PAL). Confirm that tape does not float and the major tape curl of more than 0.3 mm does not occur at the top flange of the No. 3 guide (TG3), at the top flange of the No. 6 guide (TG6) and at both the top and bottom flanges of the No. 7 guide (TG7).
2) Confirm that tape does not float and the major tape curl of more than 0.3 mm does not occur at the flanges of the respective guide when the FF button is pressed during PLAY mode to enter the CUE mode and when the REW button is pressed during PLAY mode to enter the REV mode.

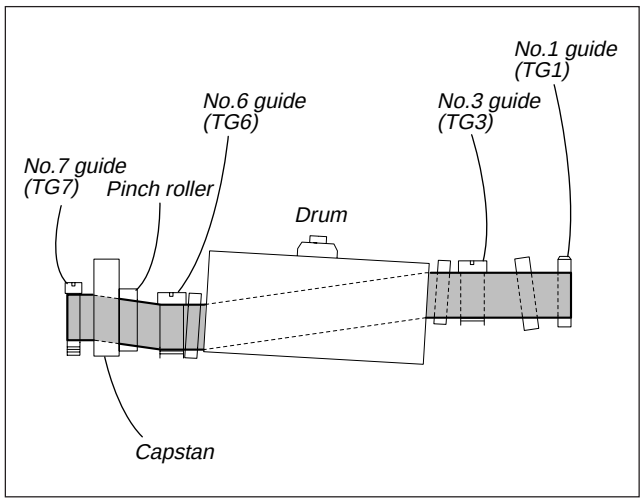


*Fig. 5-13.*

# 6. Exploded Views

## 6-1. Cassette Compartment Assy, Drum Assy

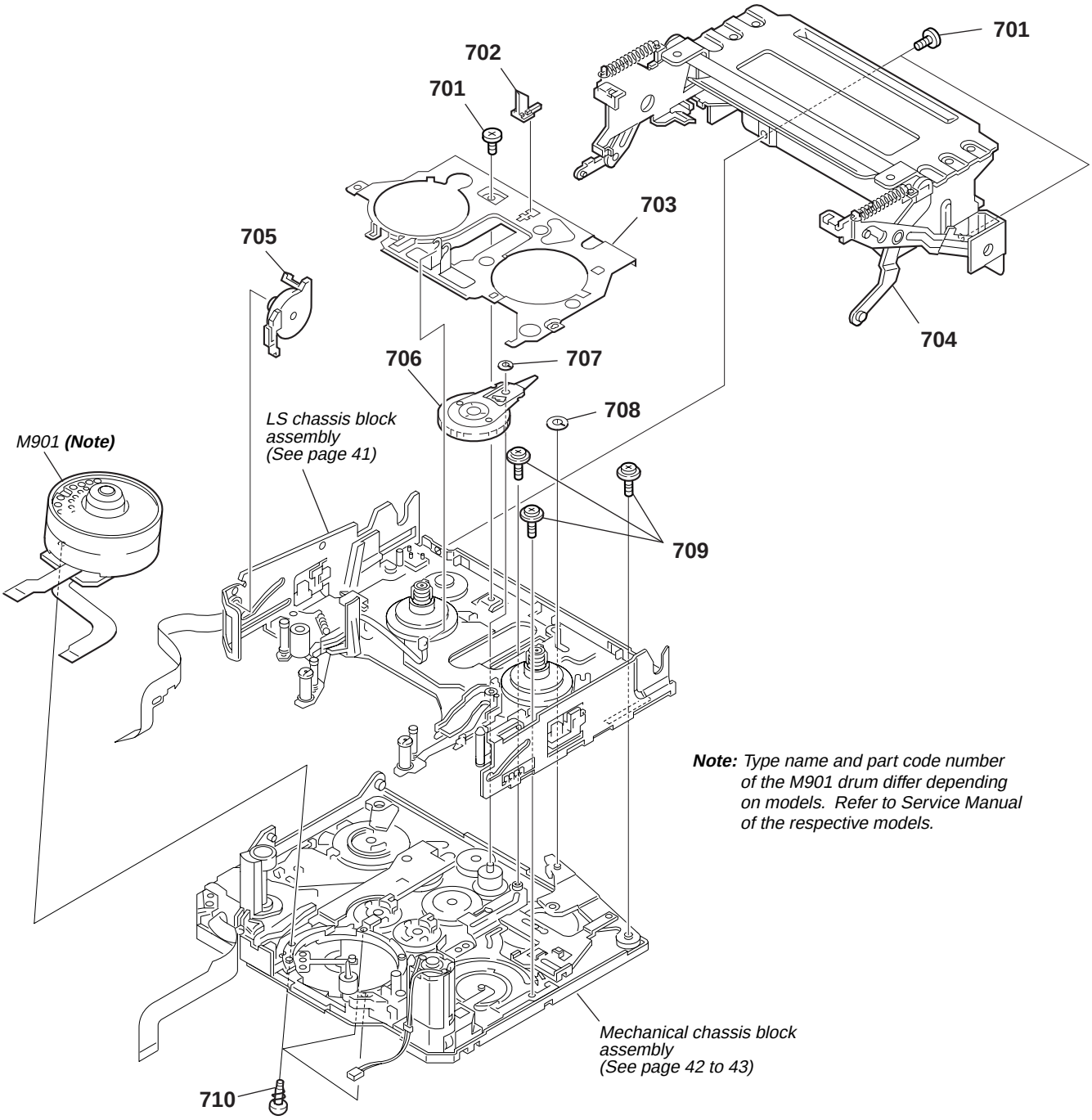


***Note:*** *Type name and part code number of the M901 drum differ depending on models. Refer to Service Manual of the respective models.*

| Ref. No. | Part No. | Description | Remarks |
|---|---|---|---|
| 701 | 3-065-932-01 | PAN (2 MAIN M1.4X1.6), CAMERA | |
| 702 | 3-065-895-01 | LEVER, REEL RELEASE | |
| 703 | 3-065-896-01 | PLATE, BLIND | |
| 704 | X-3951-298-1 | CASSETTE COMPARTMENT ASSY | |
| 705 | X-3951-302-1 | DAMPER ASSY | |
| 706 | X-3951-297-1 | GEAR ASSY, R DRIVE | |
| 707 | 3-065-840-01 | CUT (0.98X3X0.13), LUMILER (W) | |
| 708 | 3-065-935-01 | HLC CUT (1.8X4X0.5) | |
| 709 | 3-947-503-01 | SCREW (M1.4) | |
| 710 | X-3951-299-1 | SCREW ASSY, DRUM FITTING | |
| M901 | — Note — | DRUM | |

## 6-2. LS Chassis Block Assembly

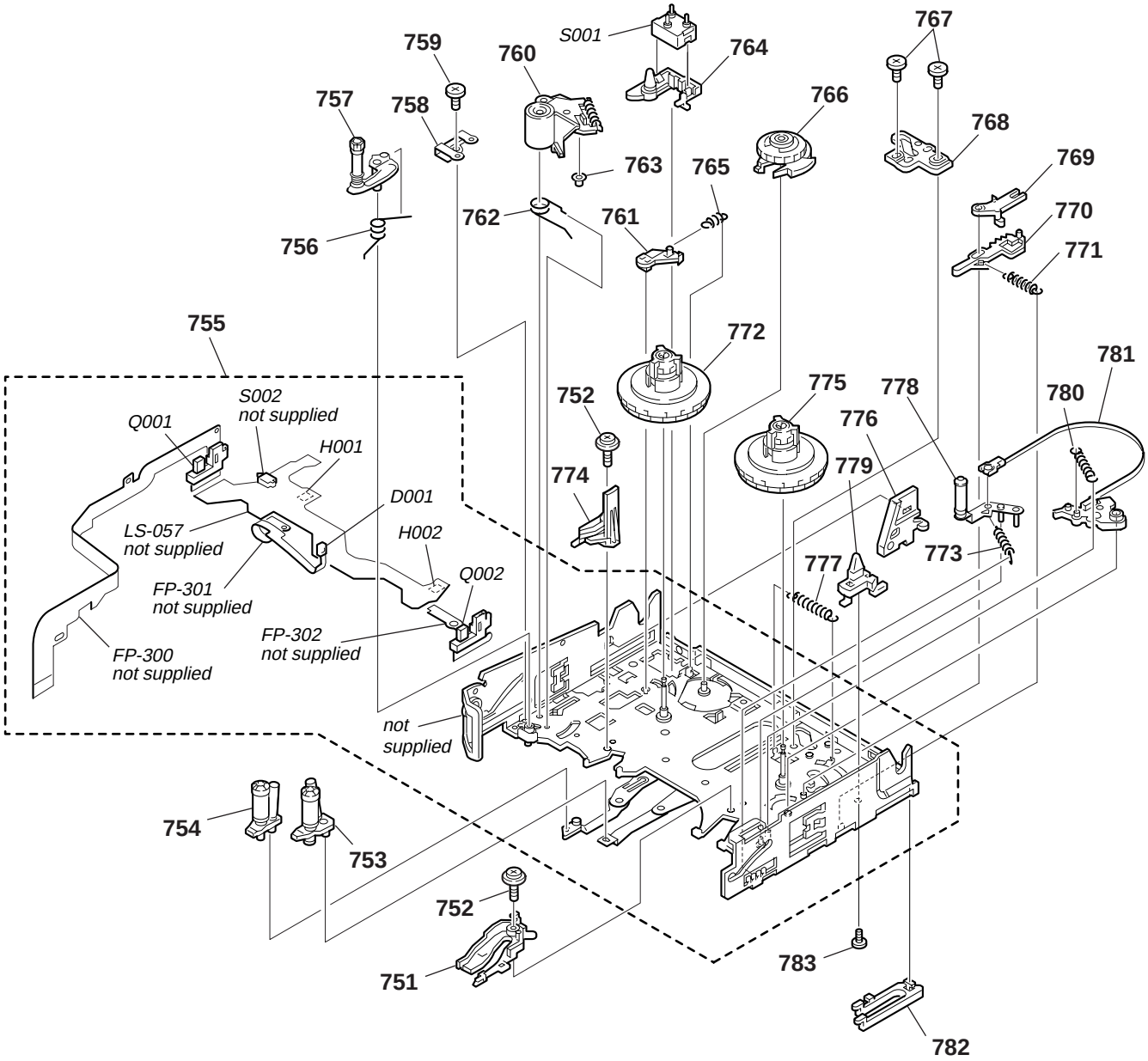


| Ref. No. | Part No. | Description | Remarks |
|---|---|---|---|
| 751 | 3-065-822-01 | RAIL (S), GUIDE | |
| 752 | 3-947-503-01 | SCREW (M1.4) | |
| 753 | A-7096-416-A | BASE (S) BLOCK ASSY, GUIDE | |
| 754 | A-7096-415-A | BASE (T) BLOCK ASSY, GUIDE | |
| 755 | A-7096-426-A | CHASSIS ASSY, LS | |
| 756 | 3-065-802-01 | SPRING, TG7 ARM | |
| 757 | A-7096-414-A | ARM BLOCK ASSY, TG7 | |
| 758 | 3-065-801-01 | RETAINER, TG7 | |
| 759 | 3-065-932-01 | PAN (2 MAIN M1.4X1.6), CAMERA | |
| 760 | X-3951-303-1 | ARM ASSY, PINCH | |
| 761 | 3-065-823-01 | ARM, T RATCHET | |
| 762 | 3-065-794-01 | ROAD (SPR), PINCH ARM | |
| 763 | 3-065-792-01 | ROLLER, P LIM ARM | |
| 764 | 3-065-834-01 | GUIDE (T), CASSETTE | |
| 765 | 3-065-824-01 | SPRING, T RATCHET | |
| 766 | A-7096-417-A | SOFT ASSY, T | |
| 767 | 7-627-852-38 | SCREW,PRECISION +P1.7X1.8 TYPE3 | |
| 768 | 3-065-832-01 | PLATE, LS CAM | |
| 769 | 3-065-828-01 | ARM, S RATCHET | |
| 770 | 3-065-829-01 | PLATE, S RATCHET (RE) | |

| Ref. No. | Part No. | Description | Remarks |
|---|---|---|---|
| 771 | 3-065-830-01 | SPRING, S RATCHET | |
| 772 | X-3951-288-1 | TABLE (T) ASSY, REEL | |
| 773 | 3-065-819-01 | SPRING, TG1 ARM | |
| 774 | 3-065-821-01 | RAIL (T), GUIDE | |
| 775 | X-3951-289-1 | TABLE (S) ASSY, REEL | |
| 776 | 3-065-833-01 | GUIDE, LOCK | |
| 777 | 3-065-831-01 | PLATE (SPR), RE RETURN | |
| 778 | X-3951-304-1 | ARM ASSY, TG1 | |
| 779 | 3-065-835-01 | GUIDE (S), CASSETTE | |
| 780 | 3-065-820-01 | SPRING, RVS ARM | |
| 781 | X-3951-296-1 | BAND (ASSY), BT | |
| 782 | 3-065-836-01 | COVER, LS GREASE | |
| 783 | 3-067-167-01 | SCREW (M1.4X2), CAMERA TAPPING | |
| D001 | 8-719-988-42 | DIODE GL453 (TAPE LED) | |
| H001 | 8-719-033-37 | ELEMENT, HALL HW-105C (T REEL) | |
| H002 | 8-719-033-37 | ELEMENT, HALL HW-105C (S REEL) | |
| Q001 | 8-729-907-25 | PHOTO TRANSISTOR PT4850F (TAPE TOP) | |
| Q002 | 8-729-907-25 | PHOTO TRANSISTOR PT4850F (TAPE END) | |
| S001 | 1-692-614-11 | SWITCH, PUSH (3 KEY) (REC PROOF) | |

## 6-3. Mechanical Chassis Block Assembly-1

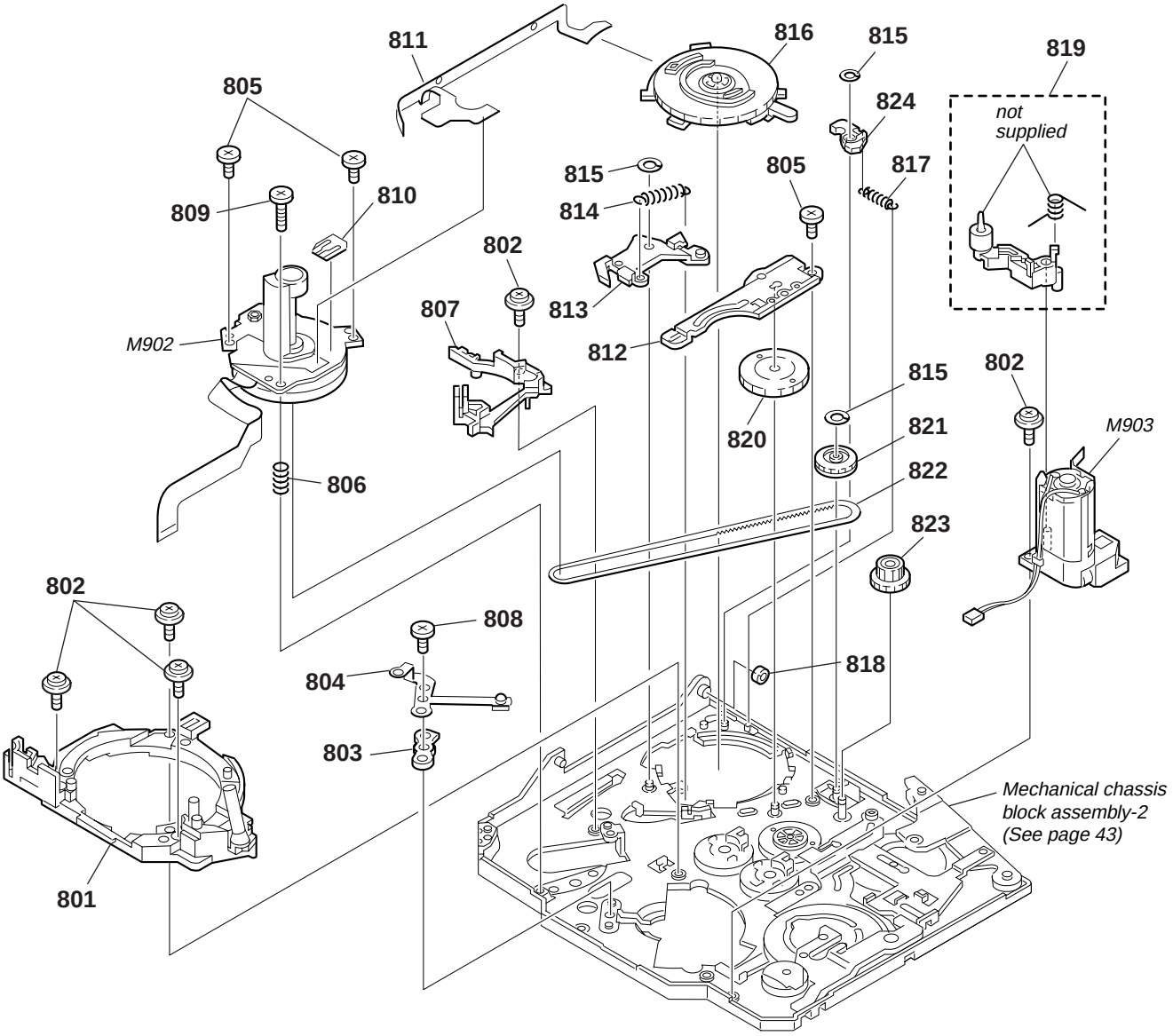


| Ref. No. | Part No. | Description | Remarks |
|---|---|---|---|
| 801 | A-7096-422-A | BASE ASSY, DRUM | |
| 802 | 3-947-503-01 | SCREW (M1.4) | |
| 803 | 3-065-928-01 | SPACER, GROUND | |
| 804 | 3-065-927-01 | GROUND, DRUM | |
| 805 | 3-065-932-01 | PAN (2 MAIN M1.4X1.6), CAMERA | |
| 806 | 3-067-154-01 | SPRING, CAPSTAN | |
| 807 | 3-065-931-01 | RAIL (T2), GUIDE | |
| 808 | X-3947-398-1 | SCREW ASSY, M1.7 PW | |
| 809 | 3-065-933-01 | PAN (2 MAIN 1.4X4.5), CAMERA | |
| 810 | 1-677-049-11 | FP-228 FLEXIBLE BOARD (DEW SENSOR) | |
| 811 | 1-680-434-11 | FP-299 FLEXIBLE BOARD | |
| 812 | 3-065-877-01 | PLATE (T), GUIDE LOCK | |
| 813 | X-3951-301-1 | PLATE ASSY, PINCH PRESSURE | |

| Ref. No. | Part No. | Description | Remarks |
|---|---|---|---|
| 814 | 3-065-881-01 | SPRING, P PRESSURE PLATE | |
| 815 | 3-065-934-01 | HLW CUT 0.98X3X0.25 | |
| 816 | 1-786-096-11 | SWITCH, ROTARY | |
| 817 | 3-065-898-01 | SPRING, EJECT ARM | |
| 818 | 3-065-870-01 | ROLLER, LS GUIDE | |
| 819 | A-7096-421-A | ARM ASSY, HCL | |
| 820 | 3-065-918-01 | GEAR (2), CAM RELAY | |
| 821 | A-7096-419-A | GEAR ASSY, CHANGE | |
| 822 | 3-065-902-01 | BELT, TIMING | |
| 823 | 3-065-905-01 | GEAR, RELAY | |
| 824 | 3-065-882-01 | ARM, EJECT | |
| M902 | 8-835-701-01 | MOTOR, DC SCE13A/C-NP (CAPSTAN) | |
| M903 | A-7096-420-A | MOTOR ASSY, LD (LOADING) | |

## 6-4. Mechanical Chassis Block Assembly-2

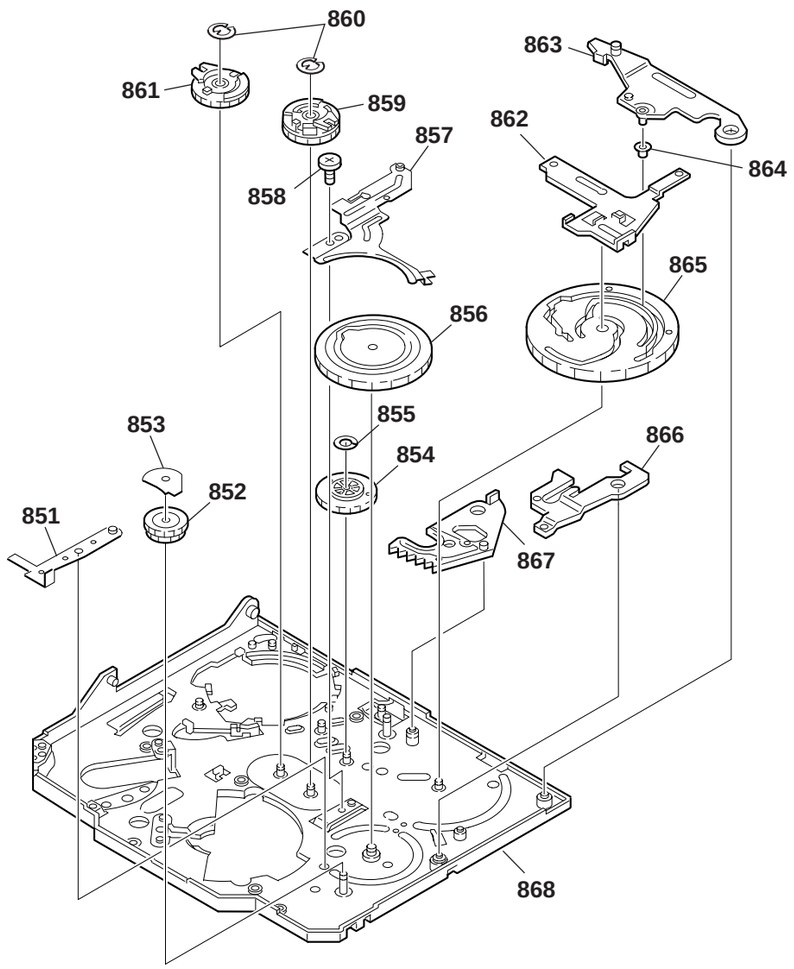


| Ref. No. | Part No. | Description | Remarks |
|---|---|---|---|
| 851 | 3-065-920-01 | ARM, HC DRIVE | |
| 852 | 3-065-913-01 | GEAR (4), LD | |
| 853 | 3-065-914-01 | SHEET, COVER | |
| 854 | 3-065-917-01 | GEAR (1), CAM RELAY | |
| 855 | 3-065-934-01 | HLW CUT 0.98X3X0.25 | |
| 856 | 3-065-915-01 | GEAR (1), CAM | |
| 857 | 3-065-878-01 | PLATE (S), GUIDE LOCK | |
| 858 | 3-065-932-01 | PAN (2 MAIN M1.4X1.6), CAMERA | |
| 859 | A-7096-413-A | GEAR (S) ASSY, GUIDE | |
| 860 | 7-624-101-04 | STOP RING 1.2 (E TYPE) | |
| 861 | A-7096-412-A | GEAR (T) ASSY, GUIDE | |
| 862 | X-3951-307-1 | PLATE ASSY, M SLIDE | |
| 863 | X-3951-305-1 | ARM ASSY, LS | |
| 864 | 3-065-901-01 | ROLLER, LS ARM | |
| 865 | 3-065-916-01 | GEAR (2), CAM | |
| 866 | 3-065-919-01 | ARM, T1 LIMITTER | |
| 867 | X-3951-308-1 | ARM ASSY, GL | |
| 868 | X-3951-300-1 | CHASSIS ASSY, MECHANICAL | |



## 7. Printed Wiring Boards and Schematic Diagrams

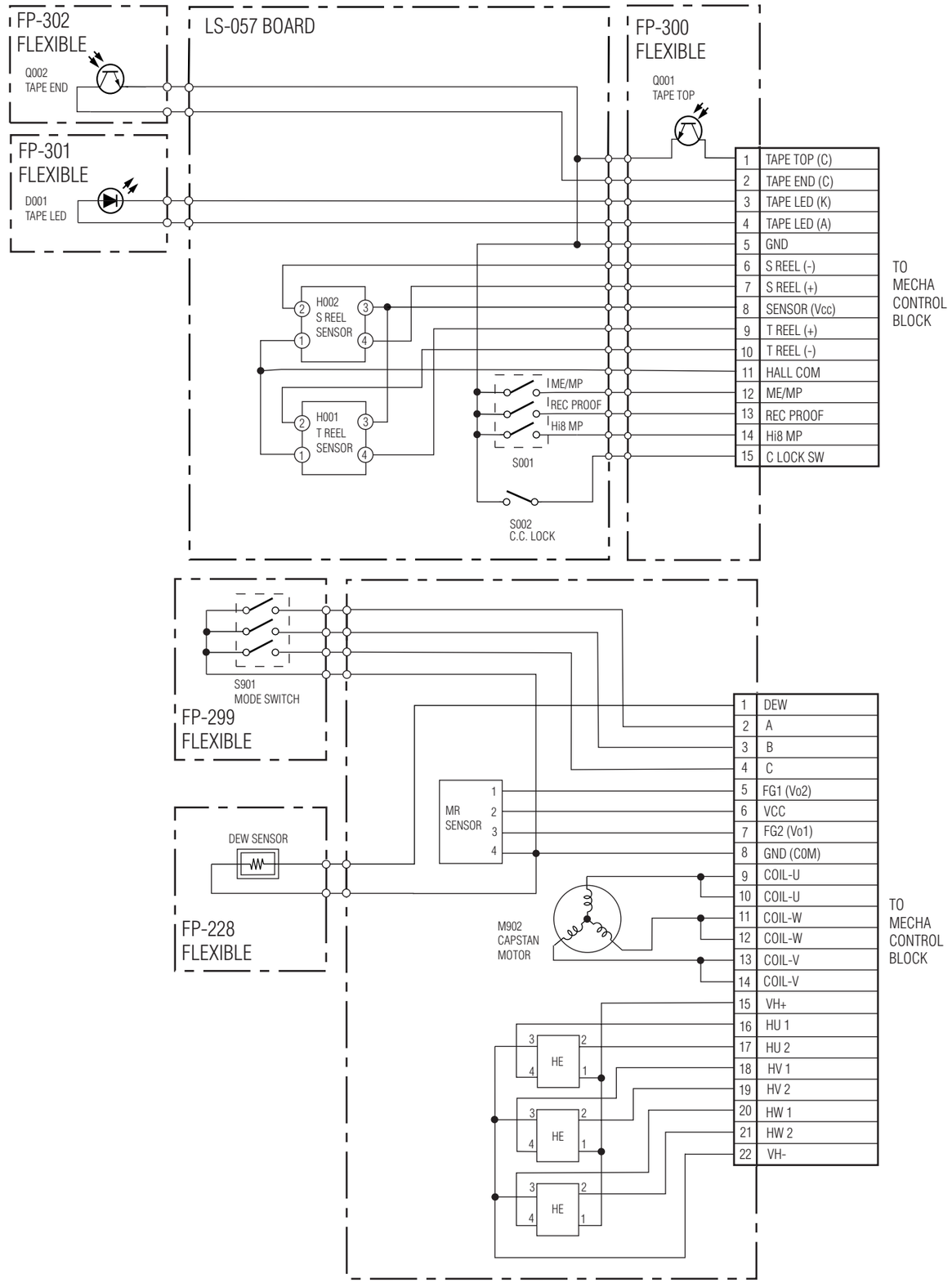

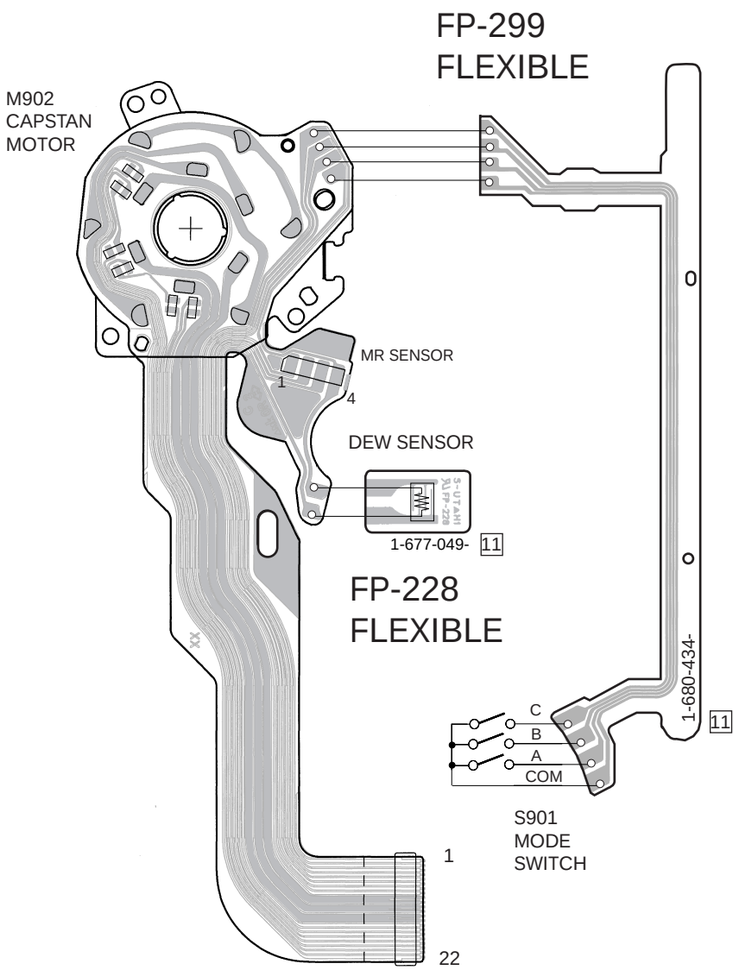
FP-299
FLEXIBLE
M902
CAPSTAN
MOTOR
MR SENSOR
1
4
DEW SENSOR
1-677-049-
11
FP-228
FLEXIBLE
1-680-434-
11
C
B
A
COM
S901
MODE
SWITCH
1
22

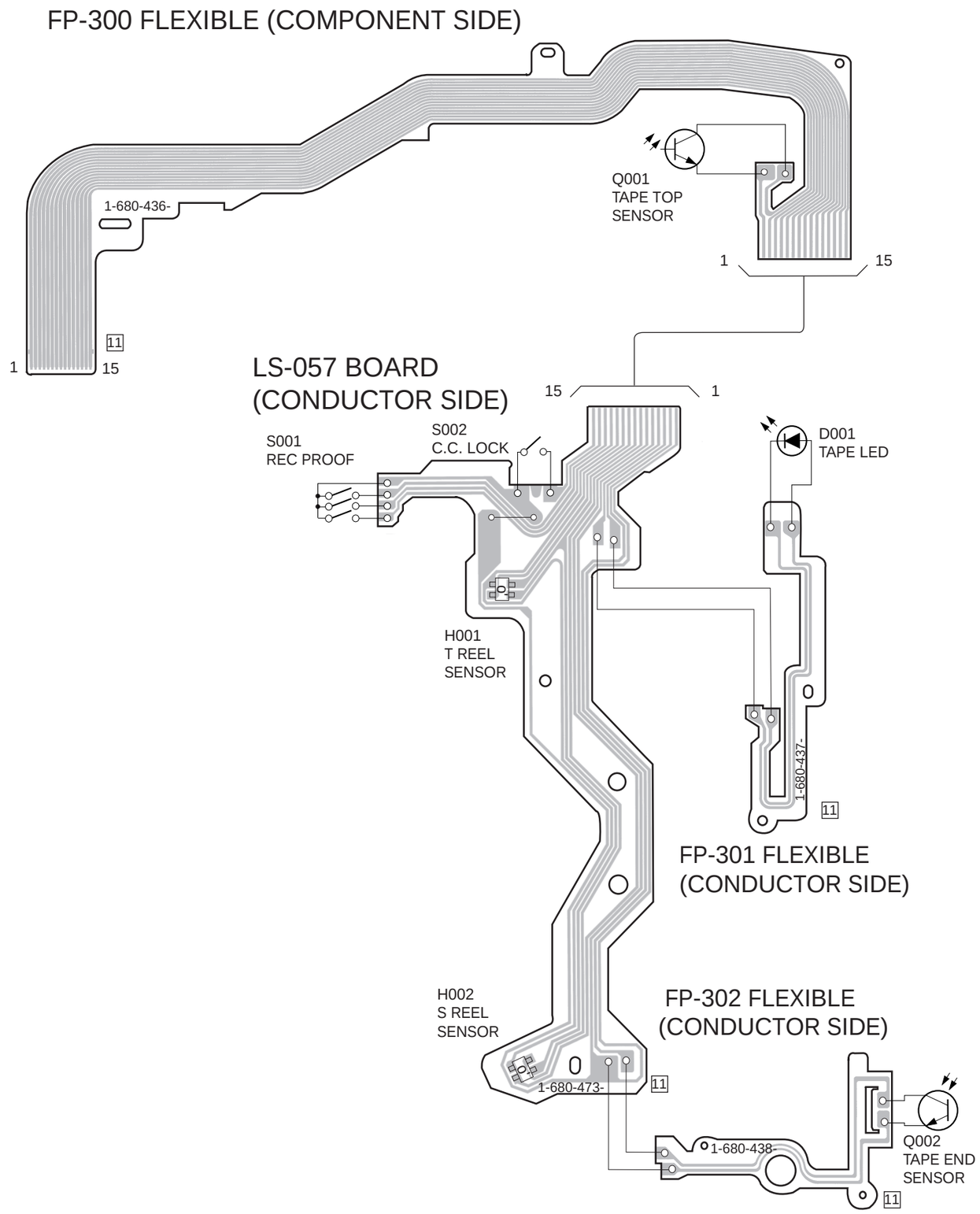
FP-300 FLEXIBLE (COMPONENT SIDE)
1-680-436-
1
11
15
Q001
TAPE TOP
SENSOR
1
15
LS-057 BOARD
(CONDUCTOR SIDE)
15
1
S001
REC PROOF
S002
C.C. LOCK
D001
TAPE LED
H001
T REEL
SENSOR
1-680-437-
11
FP-301 FLEXIBLE
(CONDUCTOR SIDE)
H002
S REEL
SENSOR
FP-302 FLEXIBLE
(CONDUCTOR SIDE)
1-680-473-
11
1-680-438-
Q002
TAPE END
SENSOR
11

9-929-861-11

Sony Corporation
Personal VIDEO Products Company



2000L1600-1
Printed in Japan © 2000.12
Published by Safety & Service Engineering Dept.